Portapallet IRON FIST

ROSSS

FRAMES COMPONENTS

			TYPE 70					TYPE 90-110					TYPE 130				
Height	n° uprights	Galv.footplate	Bolts for footplate (code 93912 + 93913 + 93914)	n° horizontals Type70	n° diagonals Type 70	Screw M8x50+nut+washer with block (code 97491)	Screw M8x50+nut+washer (code 97490)	Bolts for footplate (code 93912 + 93913 + 93914)	n° horizontals S. 90 – 110	n° diagonals S. 90 – 110	Screw M8x70+nut+washer with block (code 97493)	Screw M8x70+nut+washer (code 97492)	Bolts for footplate (code 93917 + 93918 + 93919)	n° horizontals Type 130	n° diagonals Type 130	Screw M10x100+nut+washer with block (code 97497	Screw M10x100+nut+washer with 3 blocks code97498)
1800	2	2	4	1	4	6	2	4	1	4	6	2	4	2	8	4	4
2100	2	2	4	1	6	2	6	4	1	6	2	6	4	2	12	2	6
2400	2	2	4	1	6	6	4	4	1	6	6	4	4	2	12	4	6
2700	2	2	4	1	7	4	6	4	1	7	4	6	4	2	14	4	6
3000	2	2	4	1	7	6	5	4	1	7	6	5	4	2	14	5	6
3300	2	2	4	1	8	4	7	4	1	8	4	7	4	2	16	5	6
3600	2	2	4	1	8	6	6	4	1	8	6	6	4	2	16	6	6
3900	2	2	4	1	9	4	8	4	1	9	4	8	4	2	18	6	6
4200	2	2	4	1	9	6	7	4	1	9	6	7	4	2	18	7	6
4500	2	2	4	1	10	4	9	4	1	10	4	9	4	2	20	7	6
4800	2	2	4	1	10	6	8	4	1	10	6	8	4	2	20	8	6
5100	2	2	4	1	11	4	10	4	1	11	4	10	4	2	22	8	6
5400	2	2	4	1	11	6	9	4	1	11	6	9	4	2	22	9	6
5700	2	2	4	1	12	4	11	4	1	12	4	11	4	2	24	9	6
6000	2	2	4	1	12	6	10	4	1	12	6	10	4	2	24	10	6
6300	2	2	4	1	13	4	12	4	1	13	4	12	4	2	26	10	6
6600	2	2	4	1	13	6	11	4	1	13	6	11	4	2	26	11	6
6900	2	2	4	1	14	4	13	4	1	14	4	13	4	2	28	11	6
7200	2	2	4	1	14	6	12	4	1	14	6	12	4	2	28	12	6
7500	2	2	4	1	15	4	14	4	1	15	4	14	4	2	30	12	6
7800	2	2	4	1	15	6	13	4	1	15	6	13	4	2	30	13	6
8100	2	2	4	1	16	4	15	4	1	16	4	15	4	2	32	13	6
8400	2	2	4	1	16	6	14	4	1	16	6	14	4	2	32	14	6
8700	2	2	4	1	17	4	16	4	1	17	4	16	4	2	34	14	6
9000	2	2	4	1	17	6	15	4	1	17	6	15	4	2	34	15	6
9300	2	2	4	1	18	4	17	4	1	18	4	17	4	2	36	15	6
9600	2	2	4	1	18	6	16	4	1	18	6	16	4	2	36	16	6
9900	2	2	4	1	19	4	18	4	1	19	4	18	4	2	38	16	6
10200	2	2	4	1	19	6	17	4	1	19	6	17	4	2	38	17	6
10500	2	2	4	1	20	4	19	4	1	20	4	19	4	2	40	17	6
10800	2	2	4	1	20	6	18	4	1	20	6	18	4	2	40	18	6
11100	2	2	4	1	21	4	20	4	1	21	4	20	4	2	42	18	6
11400	2	2	4	1	21	6	19	4	1	21	6	19	4	2	42	19	6
11700	2	2	4	1	22	4	21	4	1	22	4	21	4	2	44	19	6
12000	2	2	4	1	22	6	20	4	1	22	6	20	4	2	44	20	6

ROSSS

TYPE OF UPRIGHTS

TYPE 70

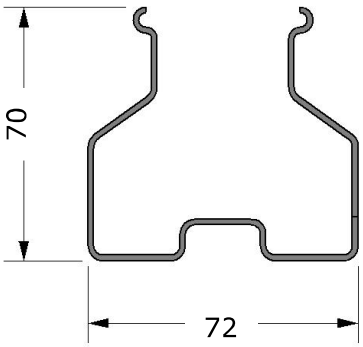

Thickness 15\10

TYPE 90

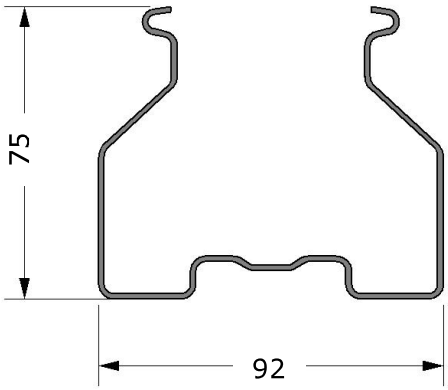

Thickness 15\10 or 20\10

TYPE 110

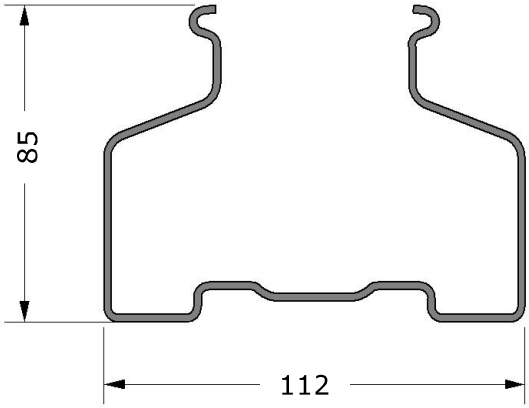

Thickness 20\10

TYPE 130

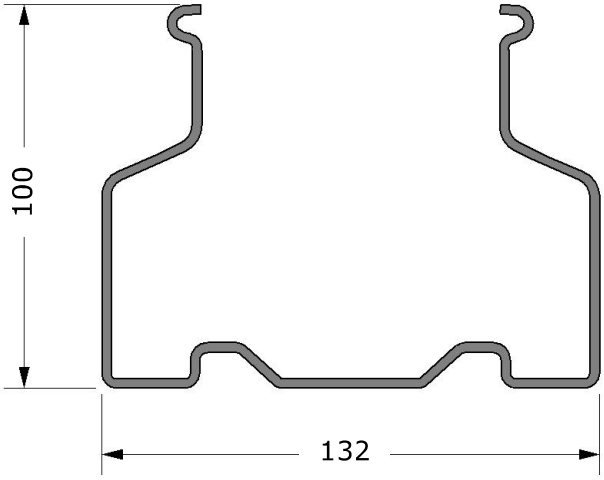

Thickness 20\10 or 25\10

ROSSS

FRAMES CONFIGURATION

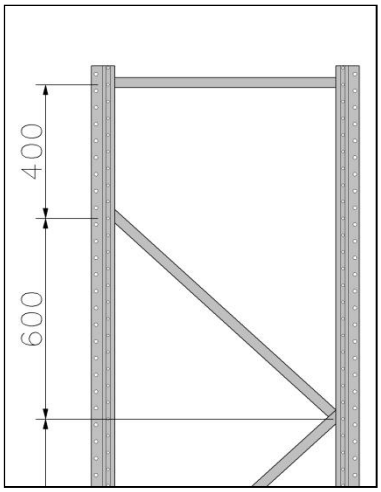

Configuration A

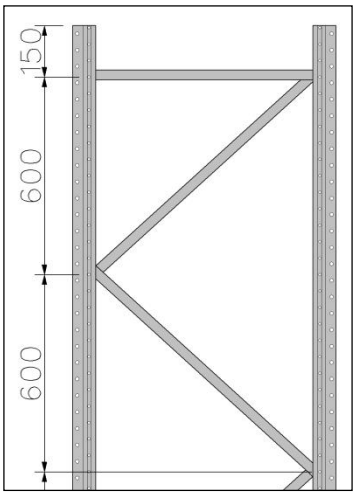

Configuration B

The diagonals' pitch in height is always 600 mm. In case of single ending horizontal, this must be positioned at 400 mm from the last diagonal.

The height from floor of the first horizontal is specified in the following pages.

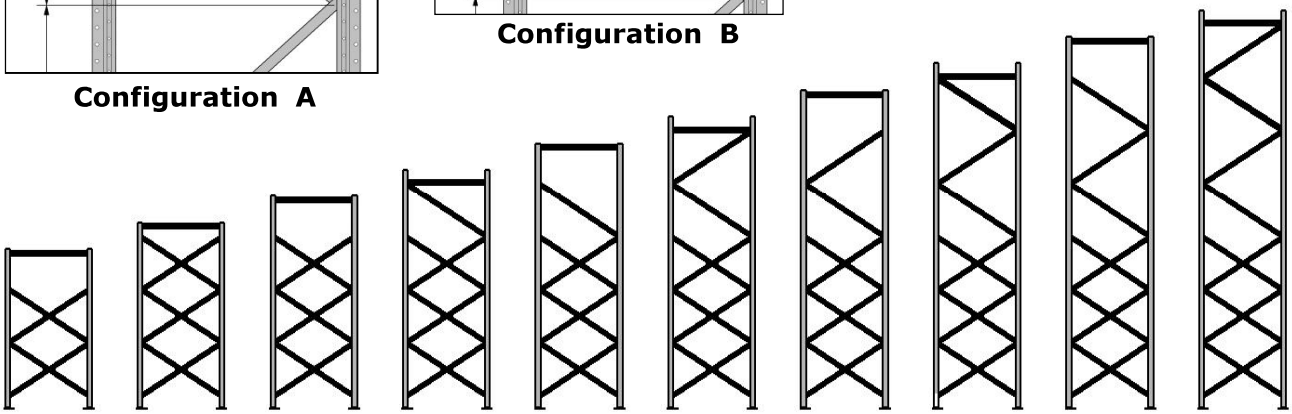

1800 2100 2400 2700 3000 3300 3600 3900 4200 4500

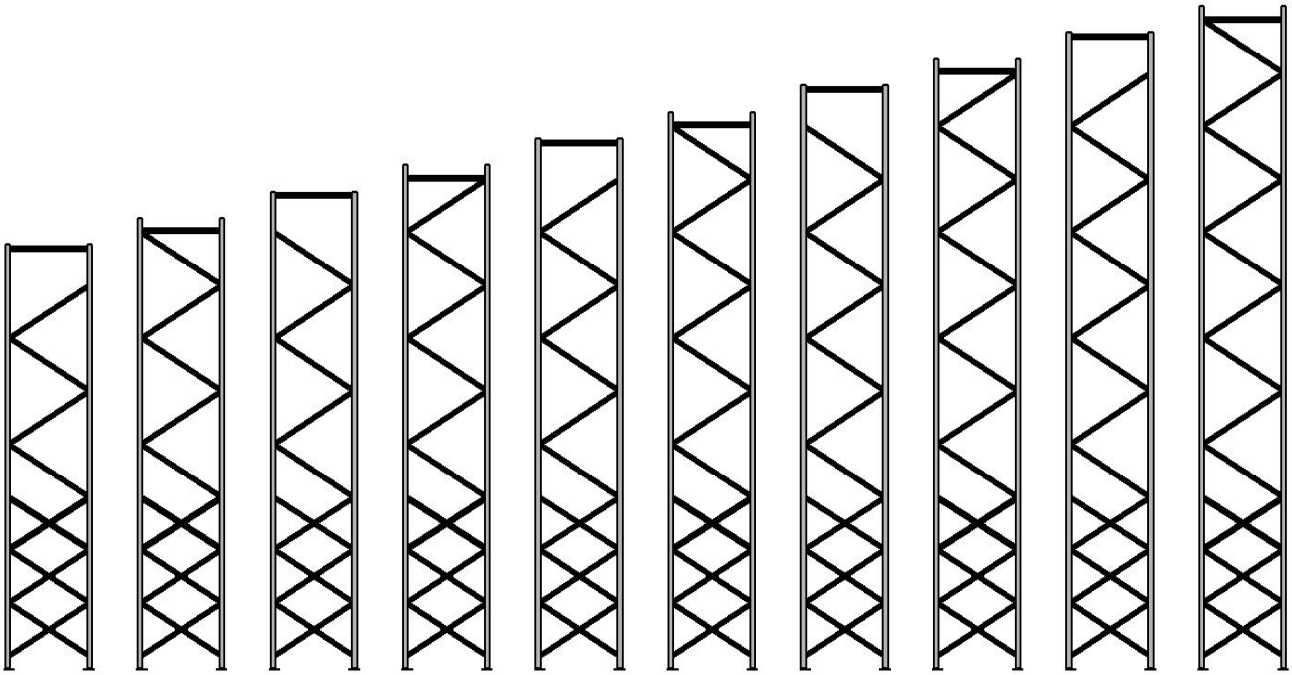

4800 5100 5400 5700 6000 6300 6600 6900 7200 7500

ROSSS

FRAMES CONFIGURATION

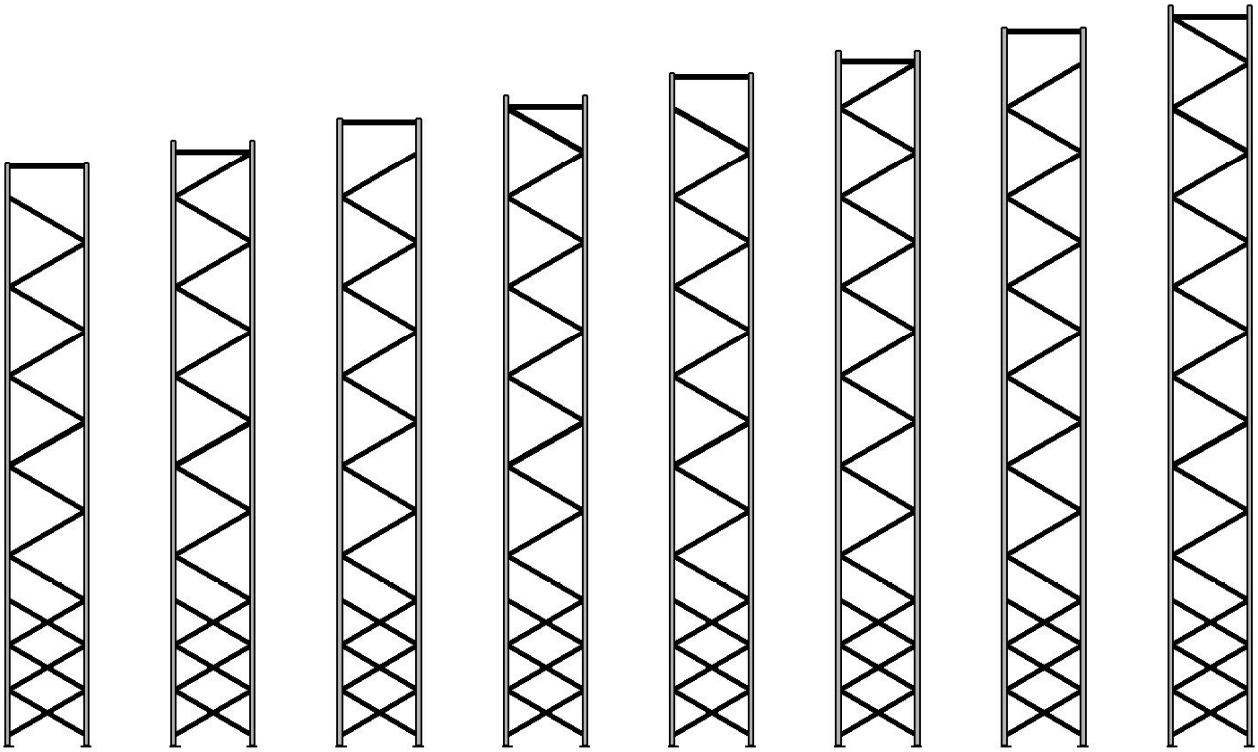

7800 8100 8400 8700 9000 9300 9600 9900

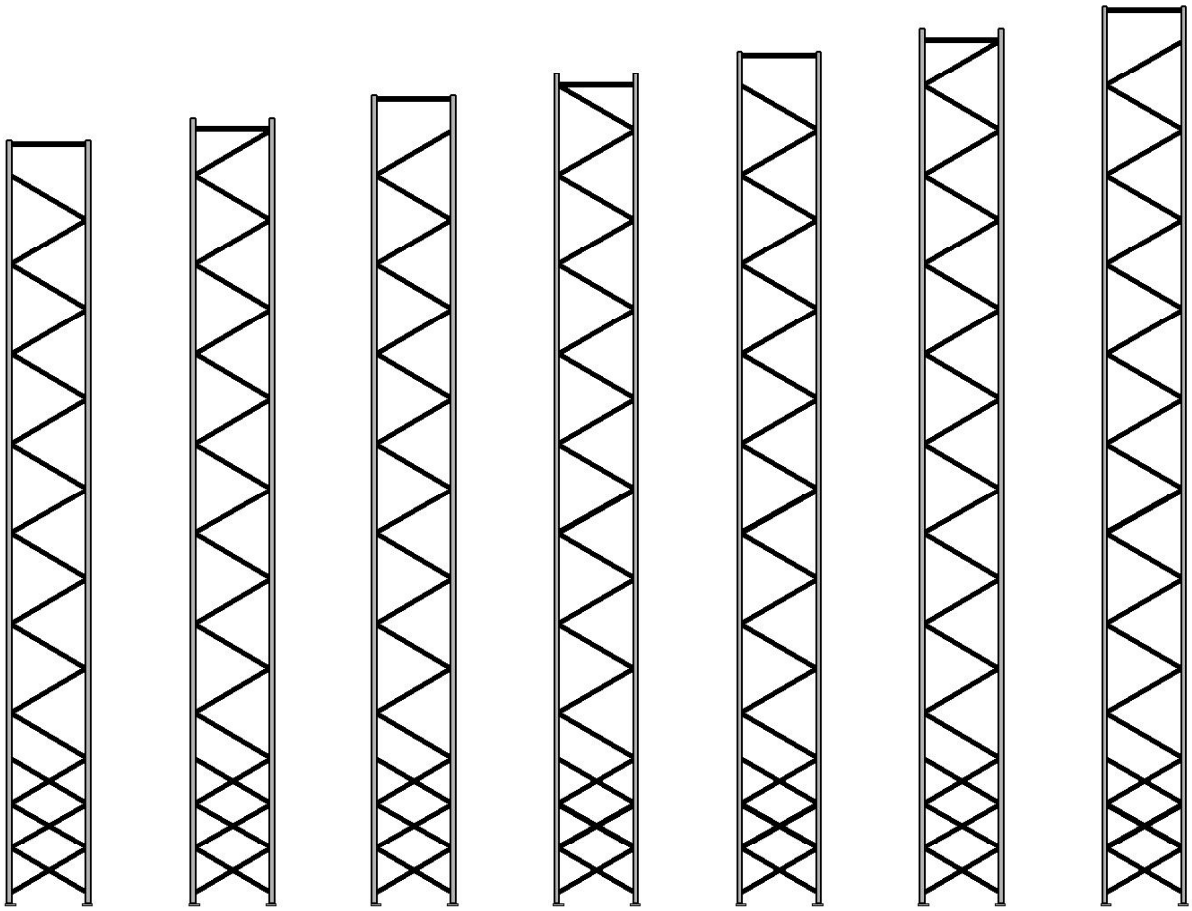

10200 10500 10800 11100 11400 11700 12000

ROSSS

ASSEMBLY FRAMES TYPE 70 – 90 - 110

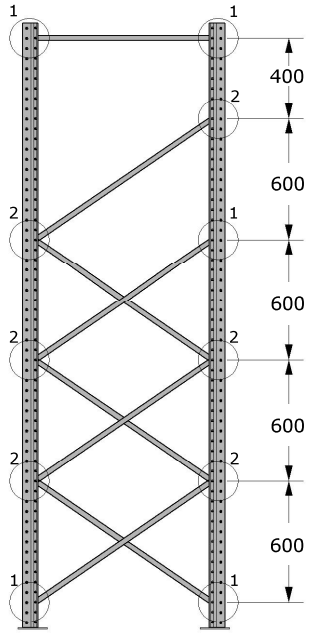

Config. A

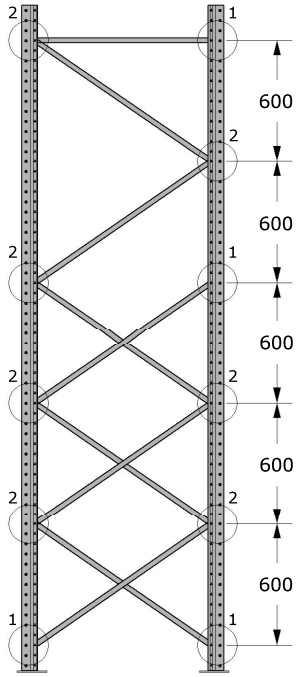

Config. B

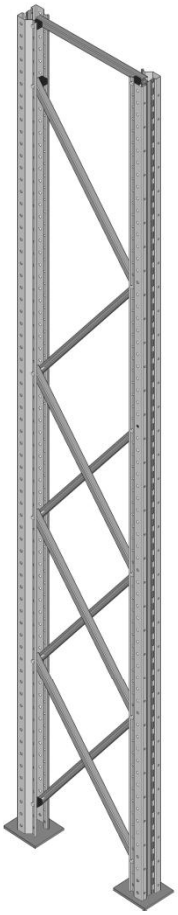

The first horizontal must be fixed to the 3rd perforation from the floor (about 150 mm) . The diagonals have always pitch every 600 mm. In configuration "A" the last horizontal must be positioned at 400 mm from the last diagonal.

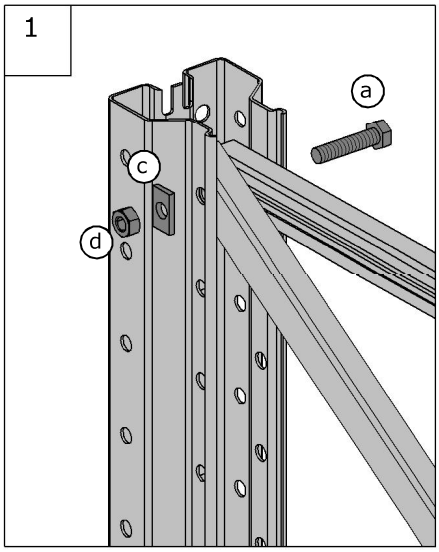

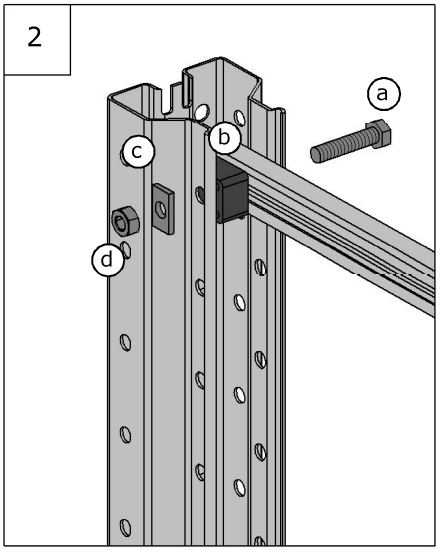

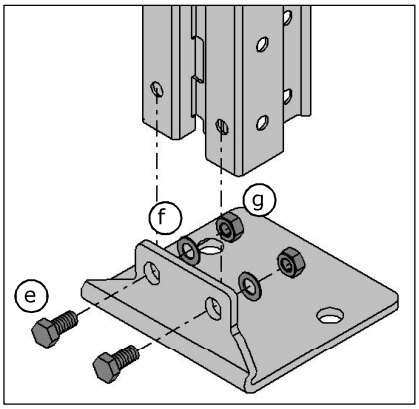

The flooring fixing hole must be of diameter Ø 10 mm.

TYPE 70

a – screw M8x50
b – pvc shims 16mm
c – square washer
d – nut M8 self-lock.
e – screw M8x16
f – washer D8
g – nut M8

TYPE 90

a – screw M8x70
b – pvc shims 25 mm
c – square washer
d – nut M8 self-lock.
e – screw M8x16
f – washer D8
g – nut M8

TYPE 110

a – screw M8x50
b – pvc shims 25mm
c – square washer
d – nut M8 self-lock.
e – screw M8x16
f – washer D8
g – nut M8

Nuts and bolts required only type 8.8.

ROSSS

ASSEMBLY FRAME TYPE 130

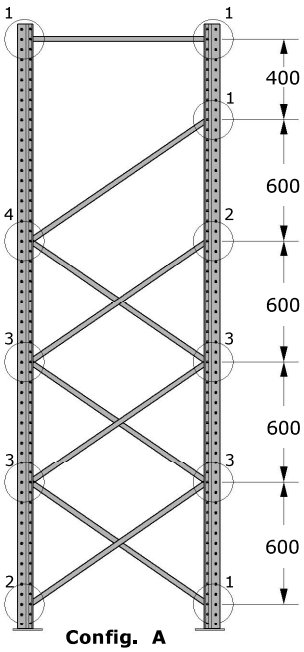

Config. A

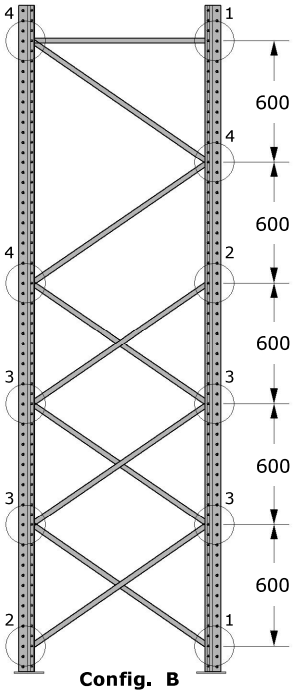

Config. B

The first horizontal must be fixed to the 2nd perforation from the floor (about 130 mm). The diagonals have always pitch every 600 mm. In configuration "A" the last horizontal must be positioned at 400 mm from the last diagonal

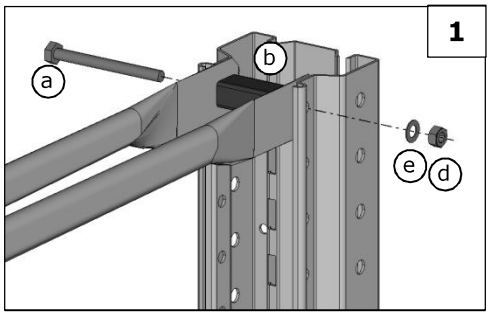

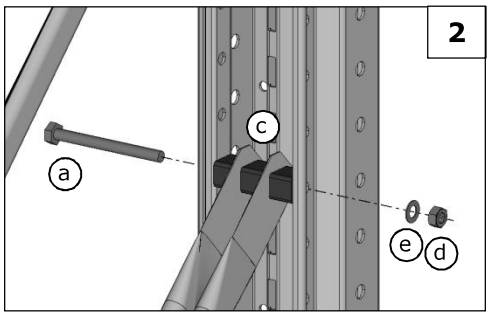

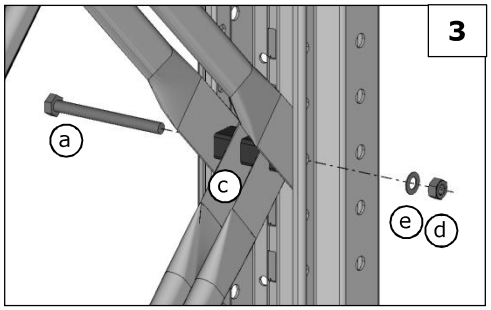

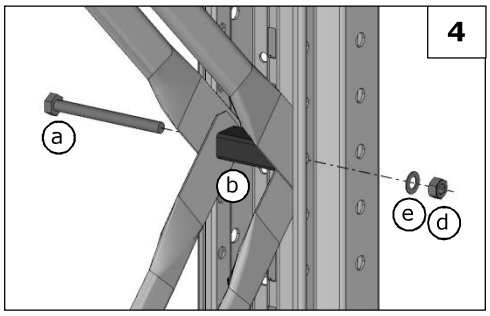

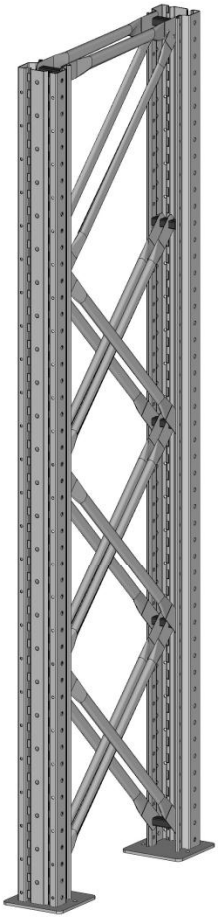

TYPE 130

a – screw M10x100
b – pvc shims 72 mm
c – pvc shims 24 mm
d – nut M8 self-lock.
e - washer D10
f – screw M12x35
g – nut M12
h – washer D12

Nuts and bolts required only type 8.8.

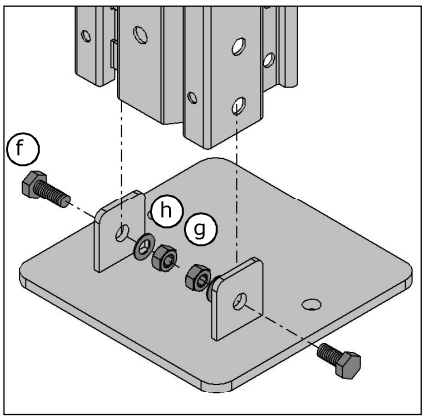

The flooring fixing hole must be of diameter Ø 10 mm.