Instructions for assembly, maintenance and use of the MEZZAMAN and its accessories

SUMMARY

A. Instructions for assembly, maintenance and use of the MEZZAMAN mezzanine and its accessories

1. Specifications and description of components

- Read this manual completely before commencing installation and use
- Carefully observe these instructions as well as the plans and recommendations provided.

These documents must be retained by the user and the operations supervisor who will need to refer to them for any maintenance or servicing and in case of questions about the conditions of use. In case of doubt, it is yourresponsibility to contact our technical services.

- Removable and free-standing equipment designed to create a storage area exclusively for indoor use under normal humidity and temperature conditions (> - 10°C). Not accessible to the public without explicit request and agreement.
- Verify the exact conformity of our equipment, its configuration and its implementation with all the constraints and the environment of the place of installation.
- Assembly must be performed by competent and qualified staff in accordance with standard industrial practices.

It is your responsibility to comply with the regulations in force relating to health and safety conditions, especially for handling, installation, assembly and use of our equipment.

- Make sure the nature and the local and overall strength of the floor is adequate.

The floor must be level, flawless and of sufficient quality to support the installation and its loading.

- Assembly of the structure and its safety equipment must be fully completed prior to access, use and loading of the facility.
- It is strictly forbidden to make changes to the structure or its equipment without our prior consent.
- The specified load capacity refers to an evenly distributed load and must not be exceeded.

It is only valid for an installation in perfect condition and whose assembly and use are in accordance with these instructions.

- Any load plates provided must be attached in places where everyone can see them, along with the EC declaration of performance plate.
- Do not place any loads on any chipboard panel overhangs outside of the structure.
- Industrial railings must not be used as backstops for storage areas. They should be fitted along walk areas accessible to staff.

Maintenance

a) Maintenance of the structure

The steel structure of the mezzanine, railings and stairs may be washed with any detergent that does not damage Epoxy paintwork (in this case, avoid detergents containing chlorine).

b) Modifications to the structure

Any modification or replacement of the structure or its accessories compared with the plans created during the design stage requires consultation with the company MANORGA.

c) Periodic inspection

The entire structure and its accessories must be inspected on a regular basis according to the standard EN 15635.

In case of impact or if the structure or any of its accessories (chipboard, railings, etc.) develops any cracks or deformations, use of the mezzanine must cease.

In this case, the owner and/or the user of the mezzanine must enlist, at its own expense, competent bodies to verify the effects of any such impacts/cracks/deformations on the strength of the structure and its accessories (EN 15635).

Defective parts must be replaced.

a) General information

Observe all the points detailed in the preamble of the instructions (page 2)
The mezzanine and its accessories are only intended for use as an industrial storage area and must not be accessible to the public without explicit request and agreement.
The maximum uniformly distributed load on the mezzanine is shown on the identification plate as well as on the factory order confirmation and must not be exceeded.
The identification plate(s) must be attached to the mezzanine in places where everyone can see them.
Particular attention must be paid to the positioning of the components of the structure
(See § II- Principles of assembly)

b) The uprights

A standard upright of the mezzanine is composed of a section profile measuring 100x100x3
mm, 120x120x3 mm or 120x120x5 mm, a footplate measuring 200x200 mm and 10 mm thick or 300x300 mm and 15 mm thick, which is welded to the bottom of the tube and has four perforations for anchorage in a concrete floor, and at the top of the upright there are two welded beam connectors able to accommodate up to 6 beams.

The figure opposite shows an example of upright + footplate + connectors:

c) The beams

A beam is fixed onto an upright using SB bolt M12, 30mm long, class 8.8, and H nuts M12 with lockwashers.

The beams are made in the following C-profiles:

Type of beam	Mass per unit length (kg/m)	SB bolt M12 *	Lockwasher*	Length	Quality
CR200.80.30.2	6.64	4	4	30 mm	Class 8.8
CR250.80.30.2	7.41	6	6	30 mm	Class 8.8
CR230.80.30.2.5	8.62	6	6	30 mm	Class 8.8
CR250.80.30.3	11.10	6	6	30 mm	Class 8.8
CR300.95.30.3	13.19	6	6	30 mm	Class 8.8
CR350.95.30.3	14.35	6	6	30 mm	Class 8.8
CR350.100.30.4	19.08	6	6	30 mm	Class 8.8
CR400.100.30.4	20.63	6	6	30 mm	Class 8.8

** Number per beam*

The tightening torque should be between 60 and 80 Nm

Examples of assemblies of beams on an upright:

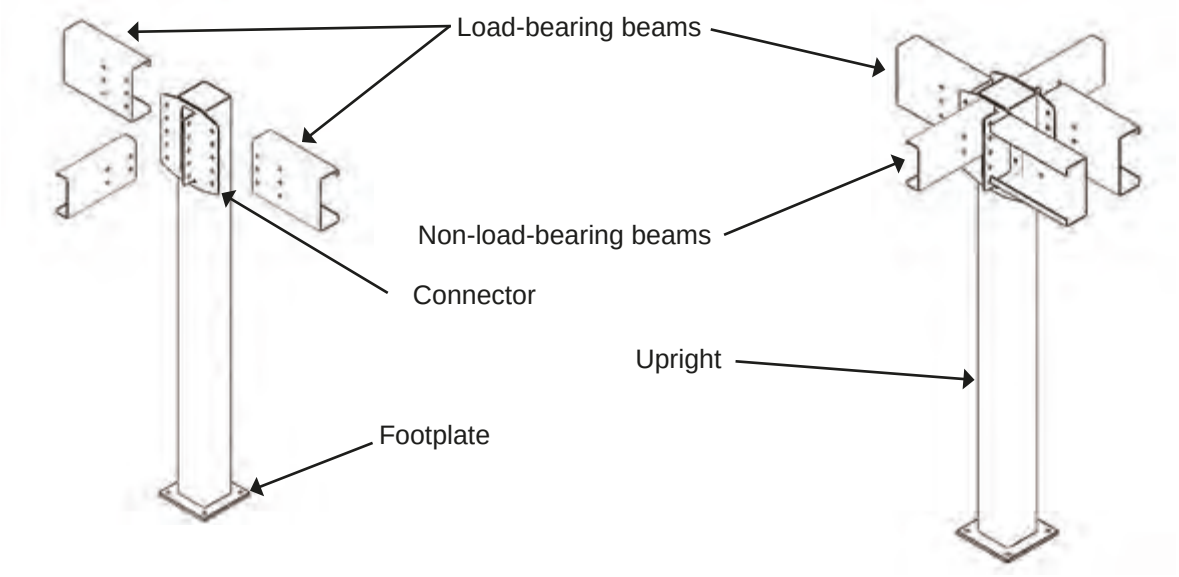

We distinguish between load-bearing beams, which receive joists, and non-load-bearing beams.
Non-load-bearing beams are mounted parallel to the joists.

We distinguish between the load-bearing and the non-load-bearing orientation of the connector, receiving the load-bearing and the non-load-bearing beams respectively, whereby the folded return is designed to receive non-load-bearing beams.

d) The joists

The joists are made in the following C-profiles:

Type of beam	Mass per unit length (kg/m)	SB bolt M12 *	Lockwasher*	Length	Quality
C150.50.12.2	4.09	4	4	30 mm	Class 8.8
C 180.50.20.2	4.73	4	4	30 mm	Class 8.8
CR200.80.30.2	6.64	4	4	30 mm	Class 8.8
CR250.80.30.2	7.41	6	6	30 mm	Class 8.8
CR230.80.30.2.5	8.62	6	6	30 mm	Class 8.8
CR250.80.30.3	11.10	6	6	30 mm	Class 8.8
CR300.95.30.3	13.19	6	6	30 mm	Class 8.8
CR350.95.30.3	14.35	6	6	30 mm	Class 8.8

** Number per beam*

The joists are bolted to the core of the load-bearing beams (each joist is notched and bent at the ends) using SB bolt M12x30, class 8.8, equipped with a lockwasher according to EN15048.

A waling system must be mounted between the joists if mentioned in the installation plan.

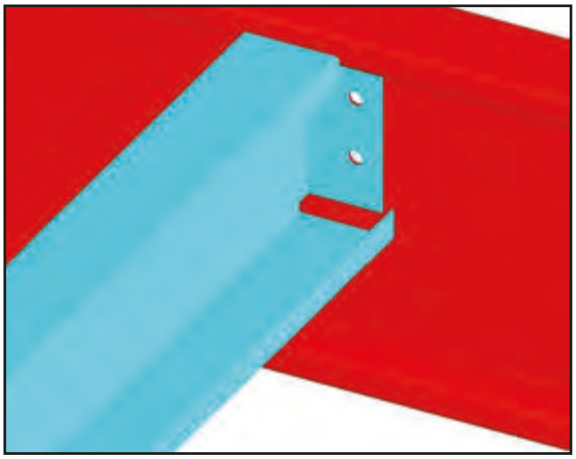

e) The flooring

The flooring is created using a layer of chipboard panels, 30 or 38 mm thick, laid in a «brick wall» arrangement with joins only over a beam or a joist (according to the layout plan supplied). The panels are fixed using self-tapping screws Ø 6.3mm, L. 70mm, with countersunk Phillips heads.

Altogether, the panels should cover the whole of the structure.

The average densities of the chipboard panels are:

Thickness 38 mm = 720 Kg/m3 (EN312-P6)

Thickness 30 mm = 640 Kg/m3 (EN312-P4)

See § II-b) for assembly of flooring.

2 PRINCIPLES AND CONDITIONS OF ASSEMBLY

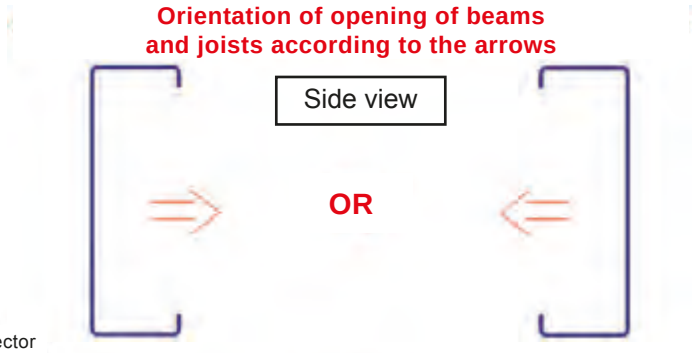

a) Assembly of the metal structure

Principles of assembly for the mezzanine

(Drawing opposite: orientation of opening.

Below: overall diagram, top view)

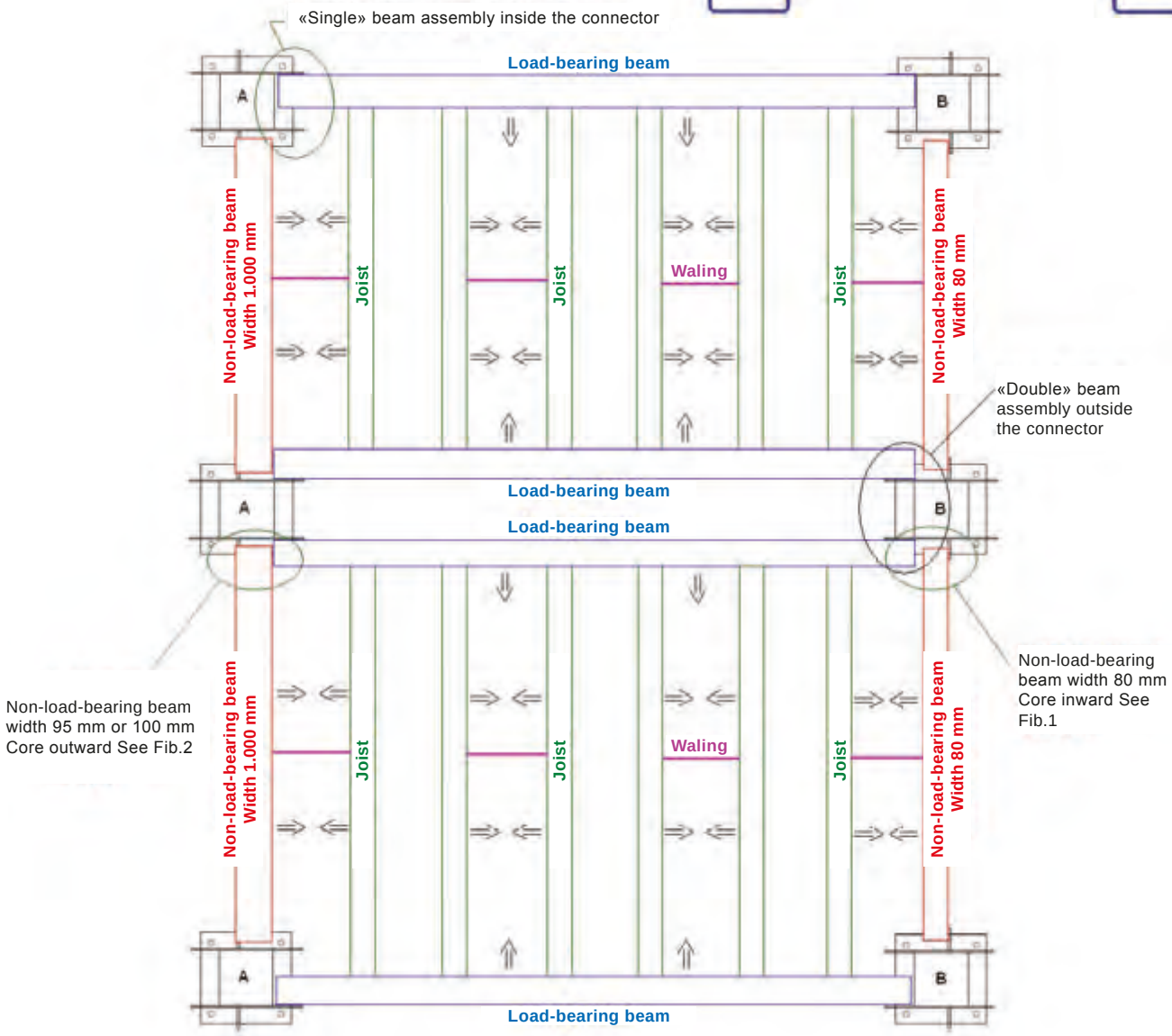

Fig. 2 (beam width 95 or 100mm)

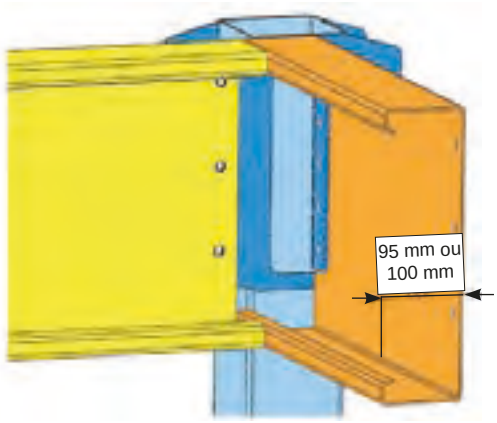

Fig. 1 (beam width 80mm)

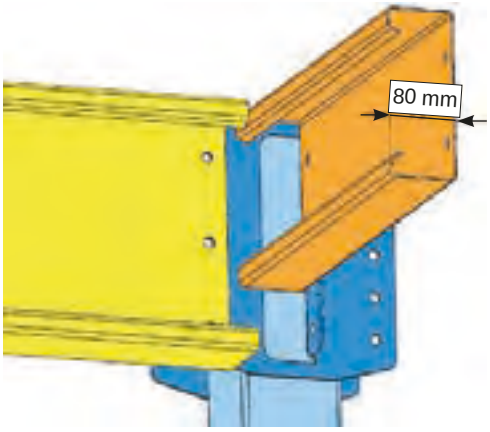

With the help of and in accordance with the installation plan provided:

Step 2.1

• Position the uprights (see assembly tolerances) at the centre distance and in the orientation A or B defined in the installation plan.

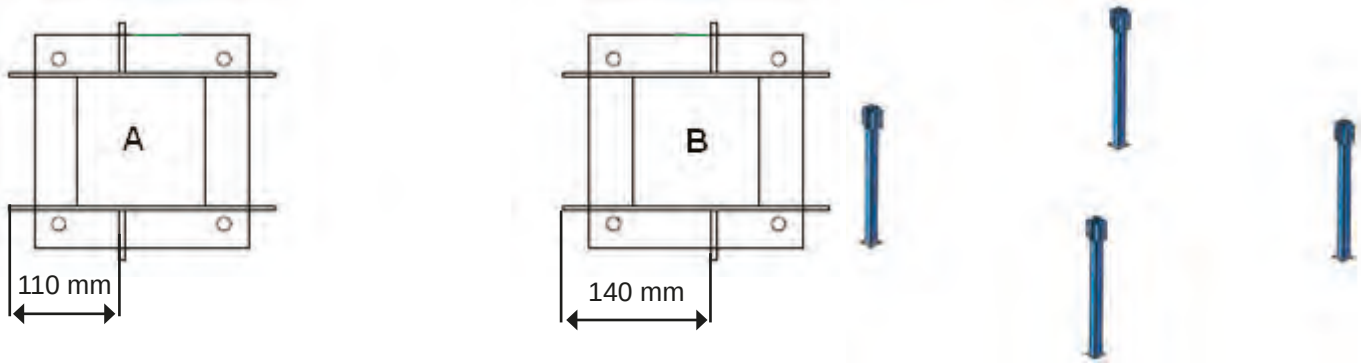

Step 2.2

Fix the load-bearing beams onto the uprights using the bolts and washers, ensuring that:

- With regard to the orientation of opening of the sections, the opening is in the direction of the arrow. or

- With regard to the up/down orientation of the beam, the intermediate perforations must coincide with those of the joists. The perforations for the waling (if any) are always located in the lower part of the section.

Visualise the assembly and the correspondence of the beam/joist perforations with the the floor prior to assembly.

- With regard to the positioning of the beam on the connector (loadbearing or non-load-bearing)

- In respect of the respect tightening torque defined in § I- c.

Plateforme sans bac acier :

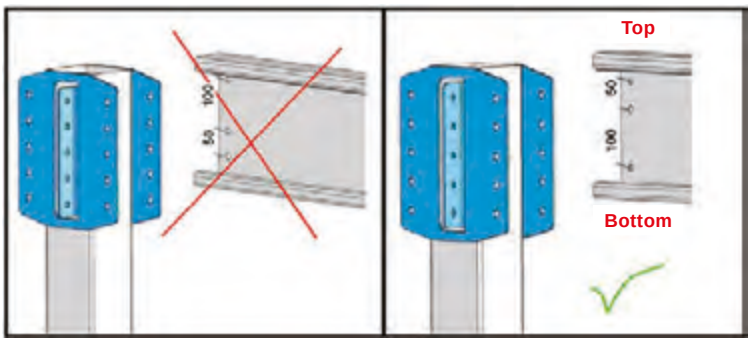

Up/down orientation: Beam CR250x80x30, thickness 2 and 3 mm :

Plateforme avec bac acier superposé :

Positioning of the beams with respect to the connectors:

The load-bearing double beams will be positioned outside the connectors.
The other load-bearing beams will be positioned inside the 2 connectors.
(See § II-a)

Step 2.3

- **Fix the non-load-bearing beams** to close the module
- **Position the joists on the main beams, respecting the orientation of opening indicated in the assembly plan by the arrows,** ⟹ or ⟸ **and the up/down orientation.**

The notching of the joists must be positioned upwards as shown in the diagram below.
The joists are therefore placed opposite each other thus:

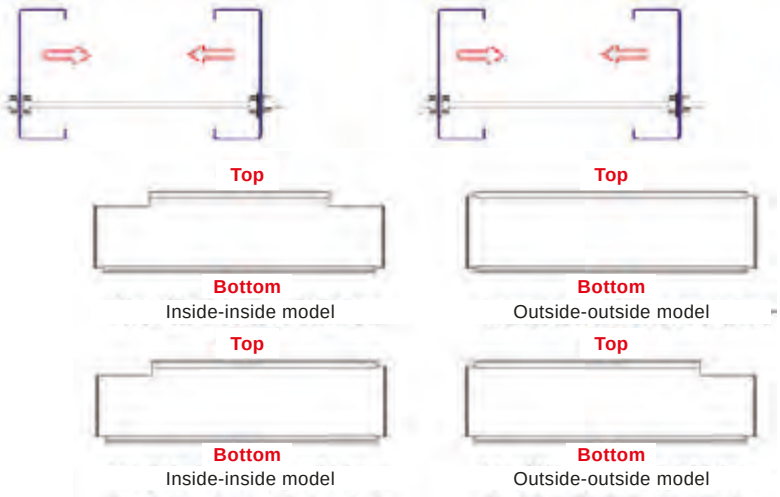

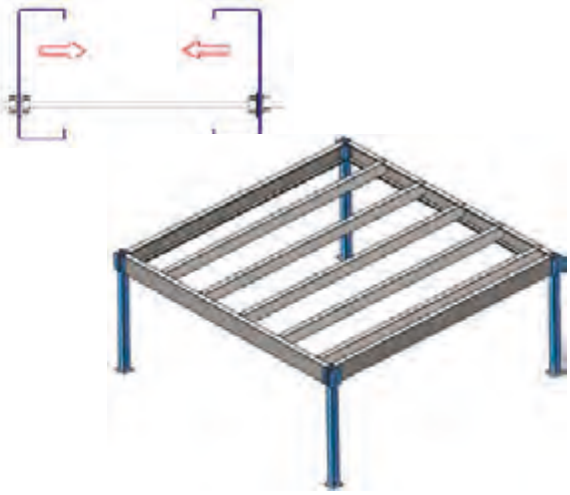

Finish assembling and tightening the first module before fitting the next elements.

Step 2.4

Repeat the above steps to obtain the complete mezzanine.

- **Fix the uprights** to the concrete floor (minimum thickness: 13 cm) using **the 4 ground anchor bolts** M12x110 supplied, **ensuring full compliance with the assembly conditions and tolerances below.**

Uprights can be shimmed up to a maximum of 2cm. Shims are available for this purpose in thicknesses of 3mm and 10mm for the 200x200x10 footplates and in thicknesses of 3mm and 15mm for the 300x300x15 footplates.

b) Assembly of pre-configured adjustable beams and joists

Step 2.5

Assembly of the adjustable beam:
The adjustable beams are composed of a semi-beam (fig.1) and a joint bar (fig.2) with perforations every 50 mm for an overall length of +/- 200 mm.

- Assemble the load-bearing beams in Step 2.2
- Adjust the joint bar to the wished length
- Fix the joint bar using 4 bolts SB M 12 at a tightening torque between 60 and 80 N.m (composition : Bolt M12, length 30 mm, class 8.8, nuts H M 12 equipped with lockwashers).
- Proceed to step 2.3

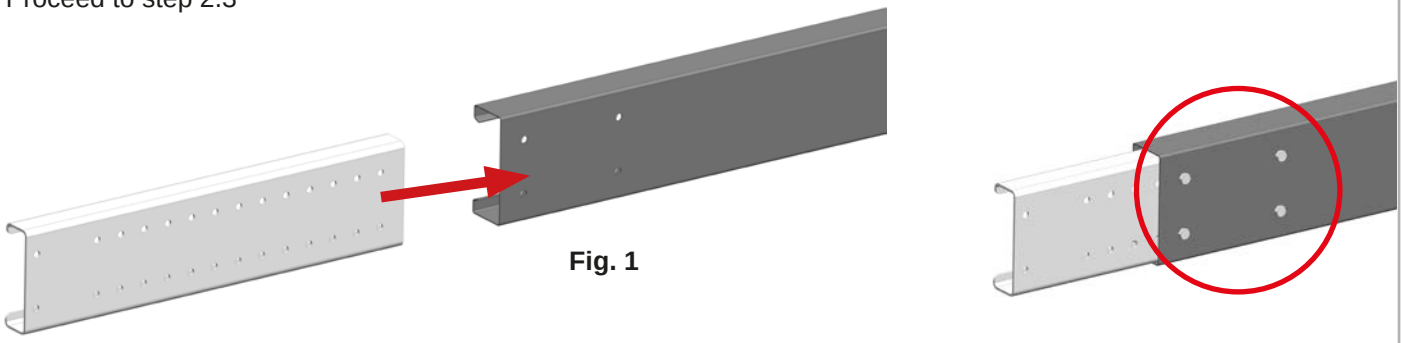

Fig. 1

Fig. 2

Step 2.6

Assembly of the adjustable joint-bar:
Same process as for the adjustable beams:

- Proceed to step 2.5 then go back to step 2.3

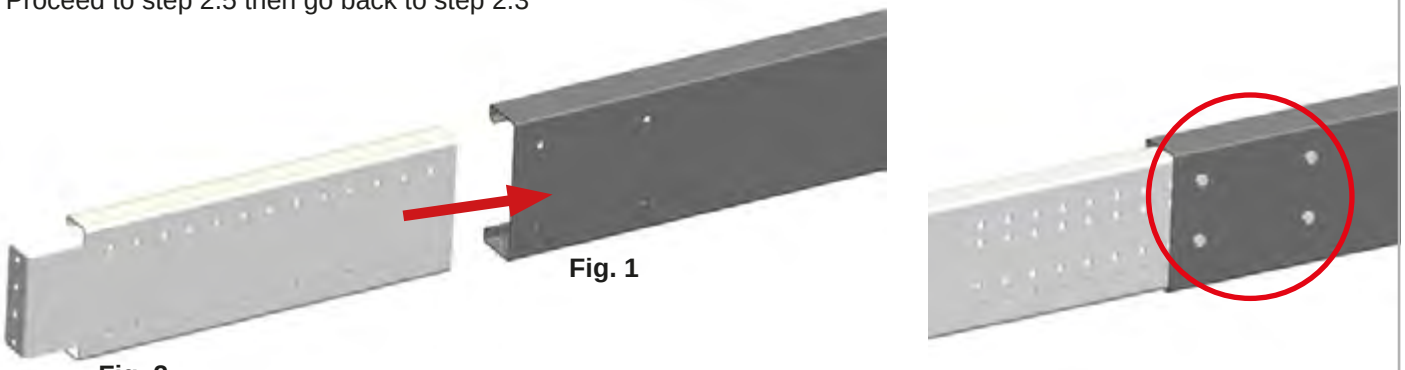

Fig. 1

Fig. 2

Note: a counter drilling Ø 5 mm is necessary to fix the floor on the joint-bar and ease the insert of the self-tapping screw Ø 6.3 x 70 mm.

c) Use of a kit of cut to adjust the beams and joists

Step 2.7

- Ask your sales partner to send you a kit of cut.
- Follow the instructions of the technical documents to cut and drill the beams and joists.

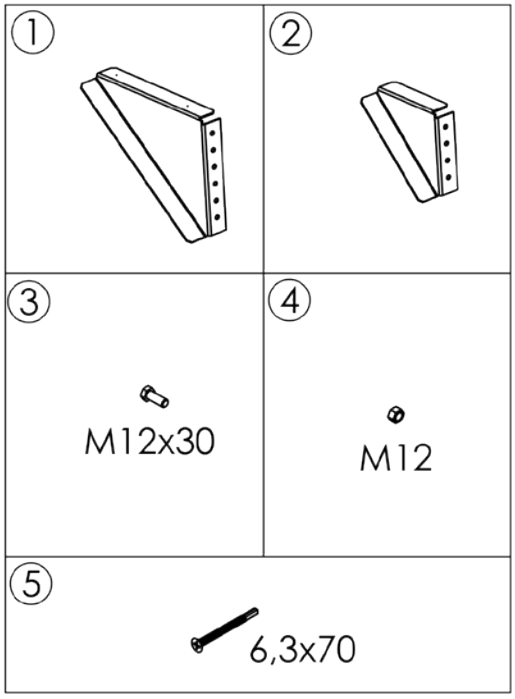
1
2
3
M12x30
4
M12
5
6,3x70

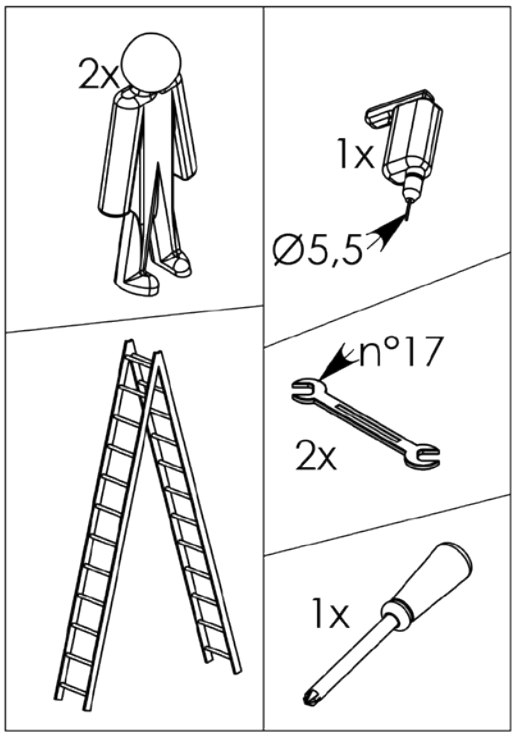
2x
1x
Ø5,5
n°17
2x
1x

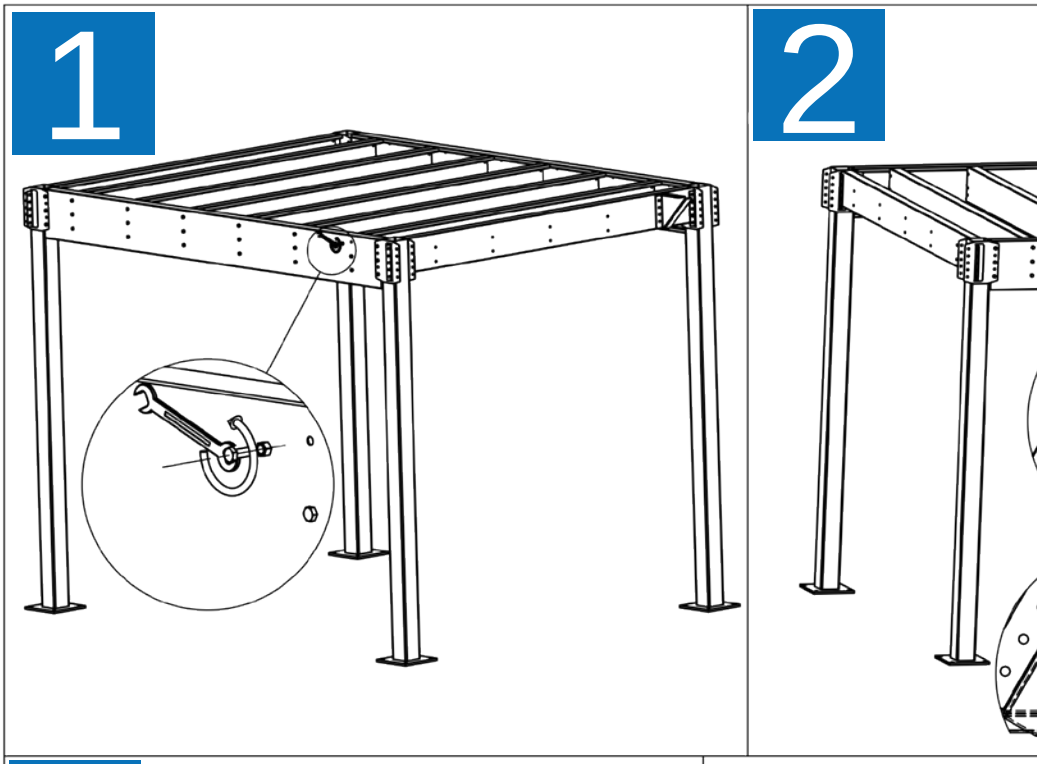
1
2

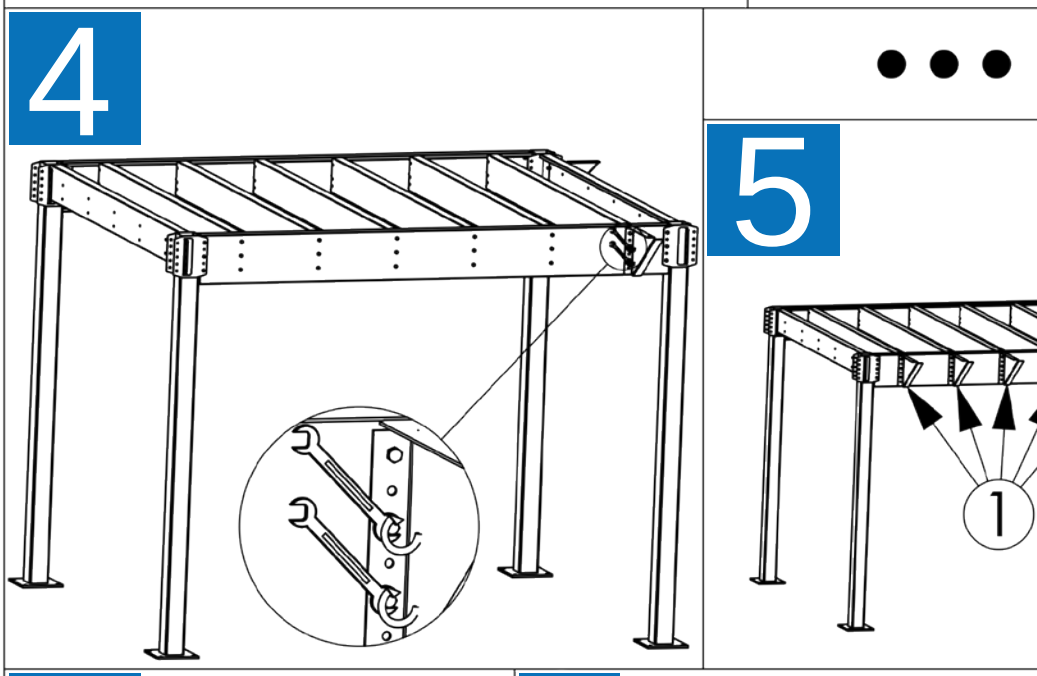
4
5
1

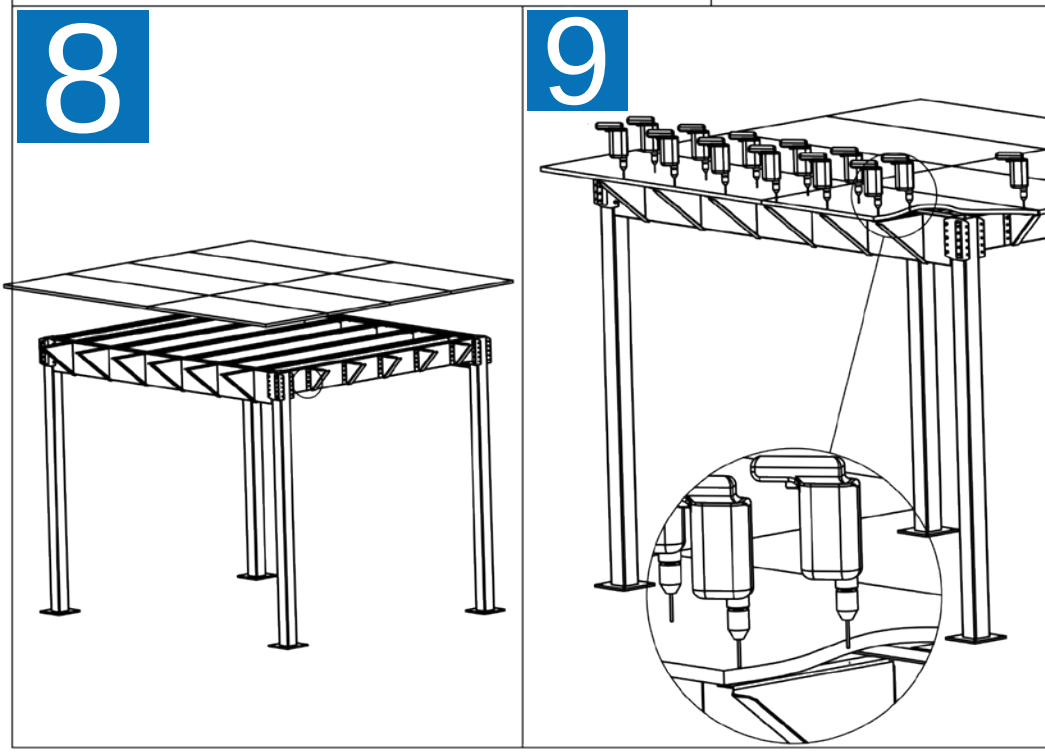
8
9

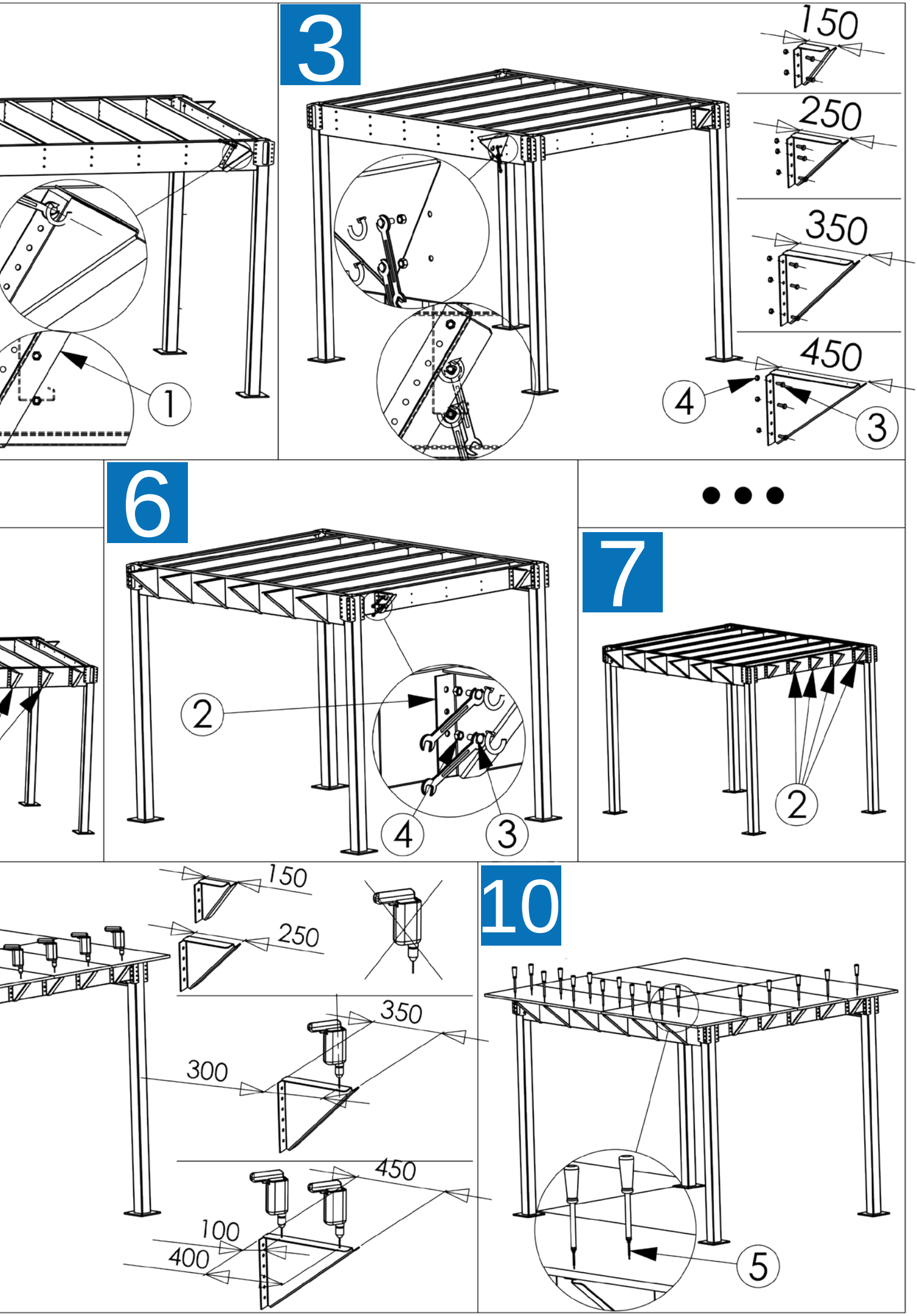
3
150
250
350
450
1
4
3
6
2
4
3
7
2
150
250
350
300
450
100
400
10
5

Tolerances to be respected during assembly (according to EN 1090-2)

Maximum out-of-plumb of one isolated upright:

$\Delta \leq$ **H / 300**

Maximum out-of-plumb of several uprights in one line:

$\Delta \leq$ **H / 150**

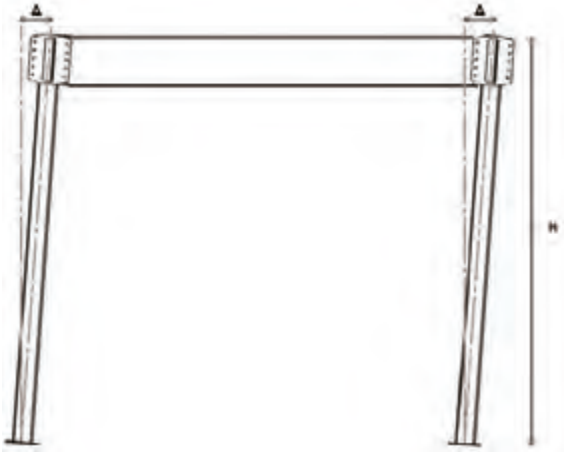

Maximum average out-of-plumb of several uprights in one line:

$\Delta m \leq$ **H / 500**
With Δm = average out-of-plumb of a line

Alignment to the floor of the axes of the uprights in their respective line:

$\Delta \leq$ **10 mm**

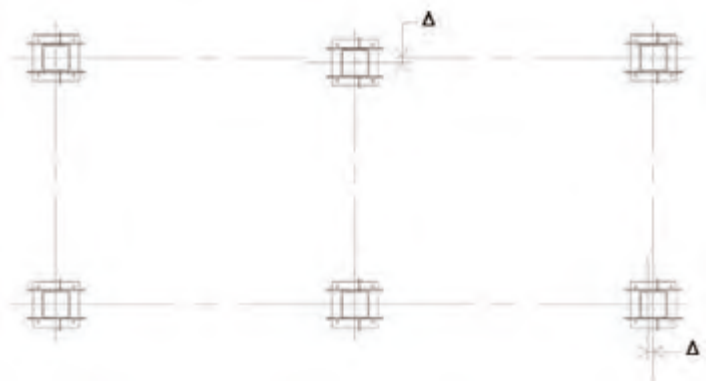

Mezzanines with upright sections of 100x100x3 and 120x120x3 (200x200x10 footplates) must be fixed to a floor with a minimum strength corresponding to that of a concrete of strength class 20/25.
Mezzanines with upright sections of 120x120x5 (300x300x5 footplates) must be fixed to a floor with a minimum strength corresponding to that of a concrete of strength class C25/30.

It is essential to have the local (punching) and overall strength of the concrete slab verified by a competent body.
The ground anchor bolts must be fixed to the floor in accordance with the assembly characteristics defined below as well as the following conditions :

- The hole must be drilled with a **Ø12 mm** drill to a depth of **85 mm**
- Any concrete residue must be cleaned out of the hole
- The distance between the axis of a ground anchor bolt and a slab edge or a saw line must be at least **85 mm**.
- The floor onto which the mezzanine and stairs will be fixed must not have any holes or significant elevations/drops that could impair the anchoring of the ground anchor bolts or negatively affect the assembly tolerances.

Maximum anchoring height tfix (footplate + eventual wedge) shall be equal to or less than 18 mm. Othewise, please contact us.

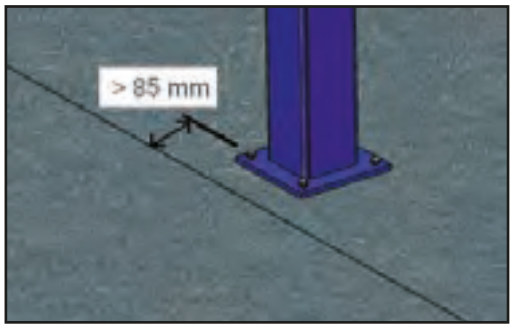

Observe the installation characteristics of these ground anchor bolts indicated below:

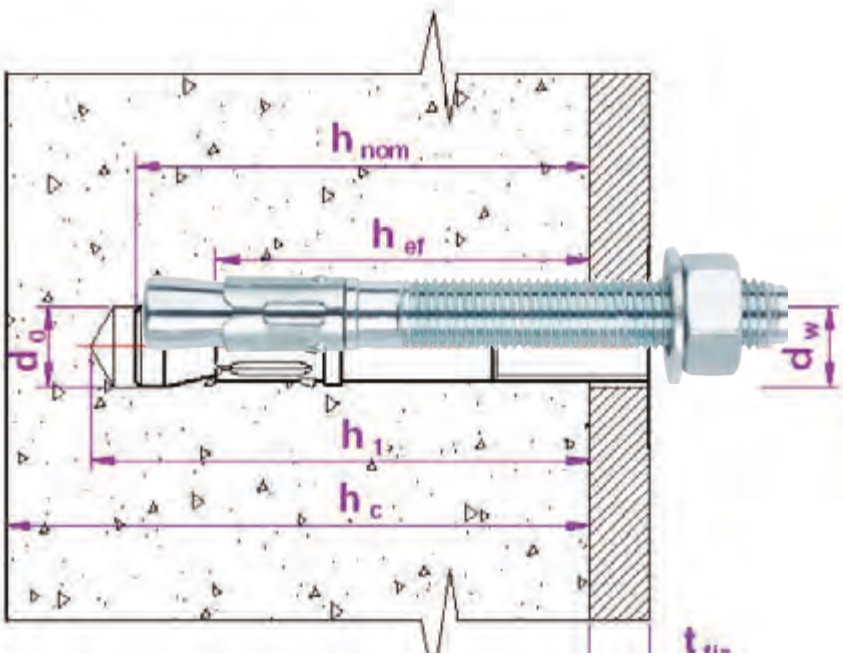

METRIC		M12
Code		AH12XXX
d_0 : Socket diameter	[mm]	12
h_1 : Drilling depth	[mm]	85
h_{nom} : Installation depth	[mm]	77
h_{ef} : Effective depth	[mm]	65
h_c : Minimum thickness of the base material	[mm]	130
T_{fix} : Maximum thickness to be fixed	[mm]	L-92
D_w : Diameter of the metal sheet	[mm]	14
T_{ins} : Tightening torque	[Nm]	60
S_{er} : Critical centre-to-centre distance	[mm]	195
C_{cr} : Critical distance to edge	[mm]	98
S_{min} : Minimum centre-to-centre distance	[mm]	85
C_{min} : Minimum distance to edge	[mm]	85

If you are providing the ground anchor bolts yourself, it is imperative that the same mechanical and dimensional characteristics are observed.

B. Instructions for assembly of cross brace and strut brace

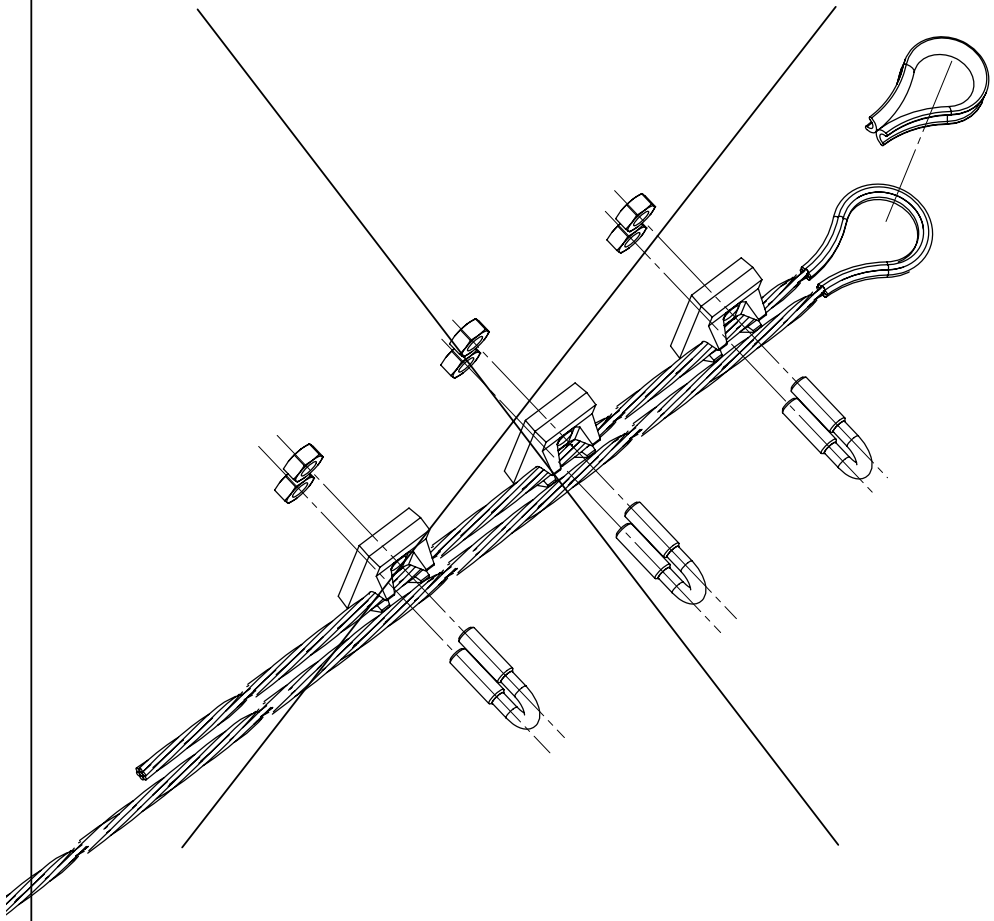

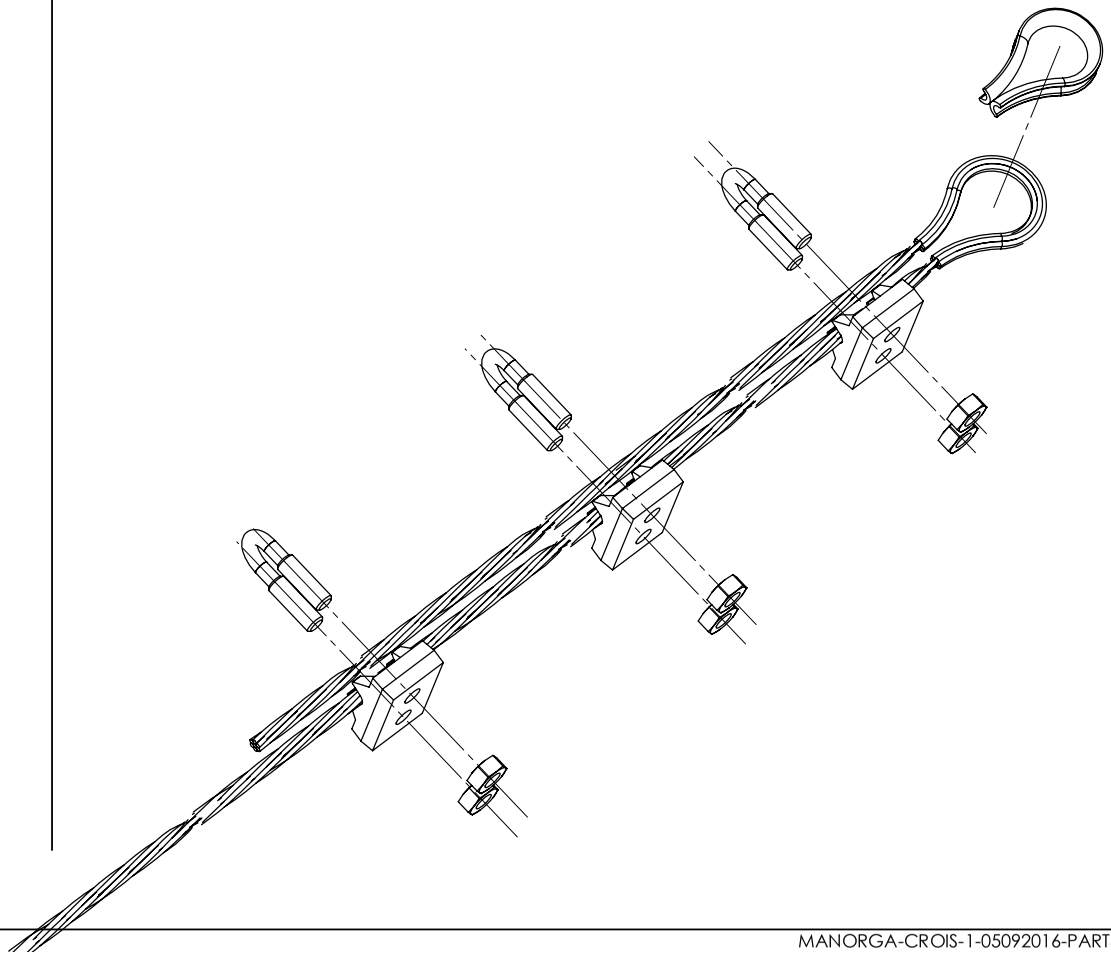

Assembly of a 1-tier mezzanine floor :

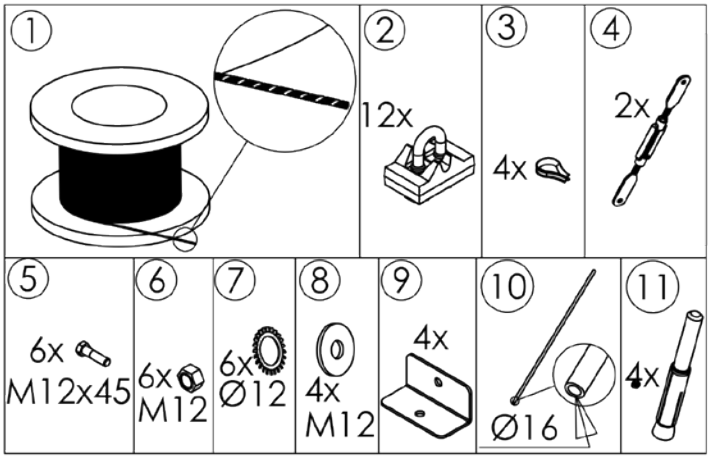

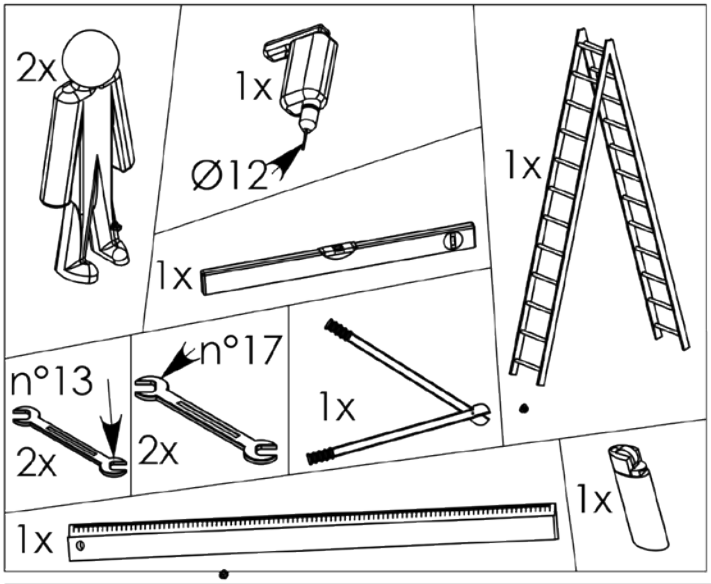

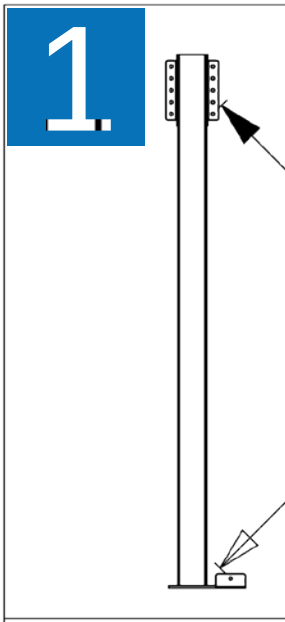

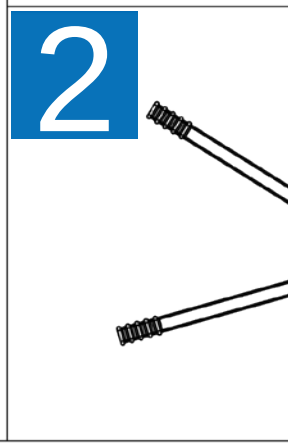

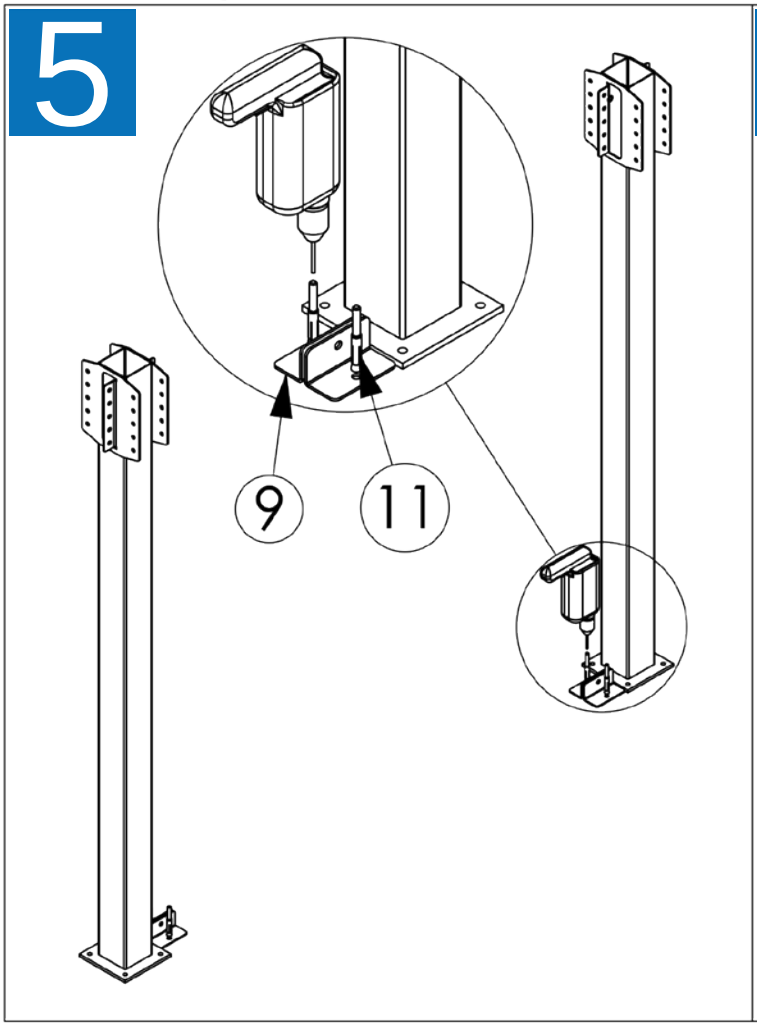

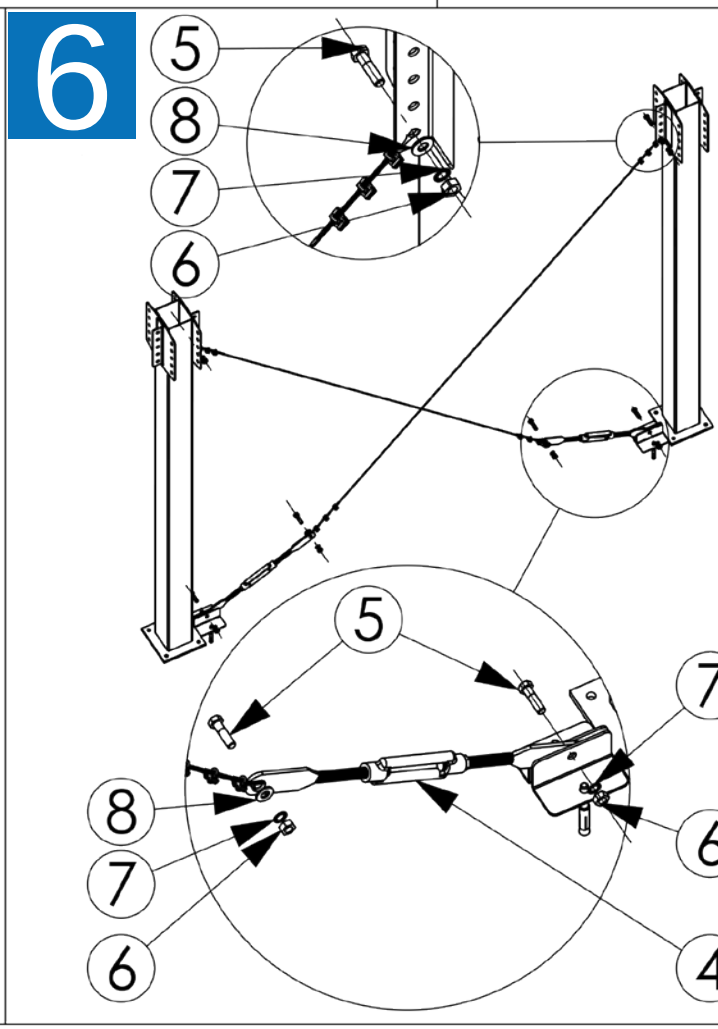

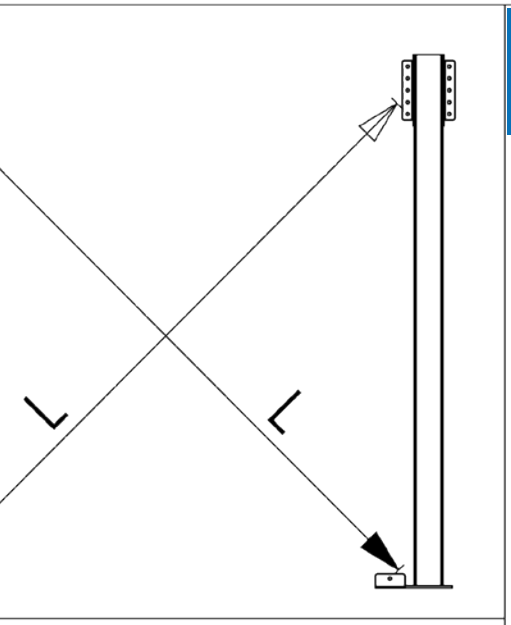
L
L

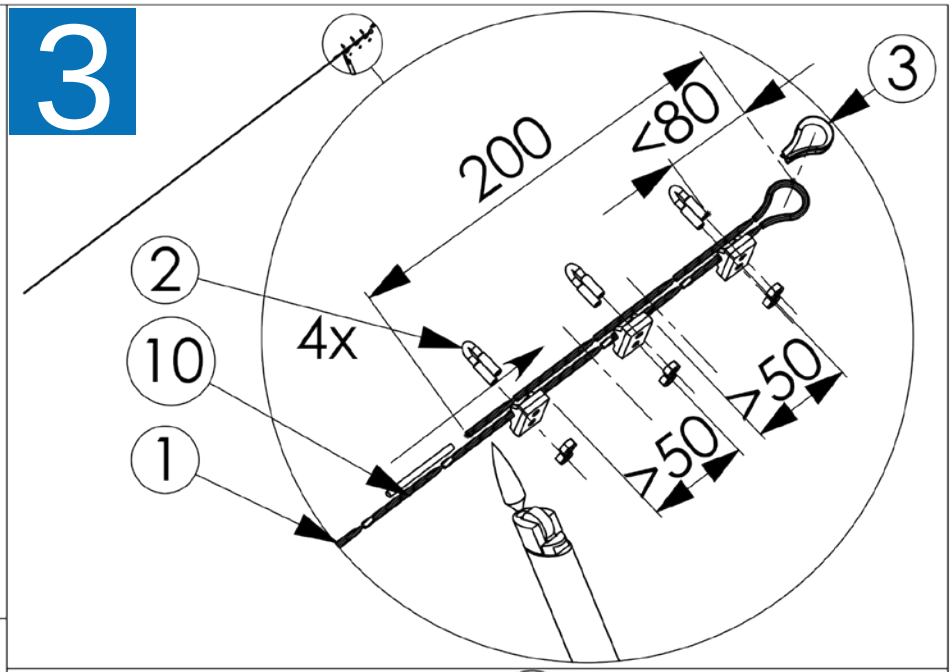
3
200
<80
3
2
4x
10
1
>50
>50

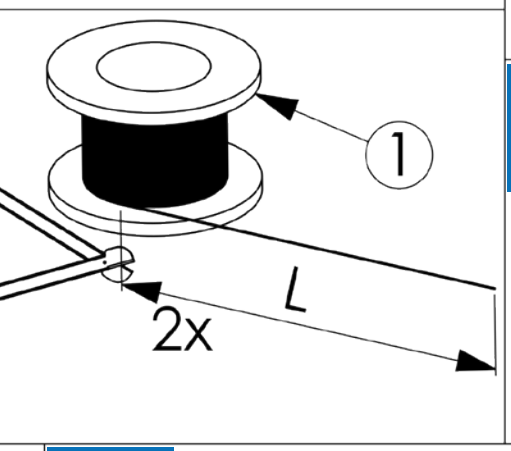
1
2x
L

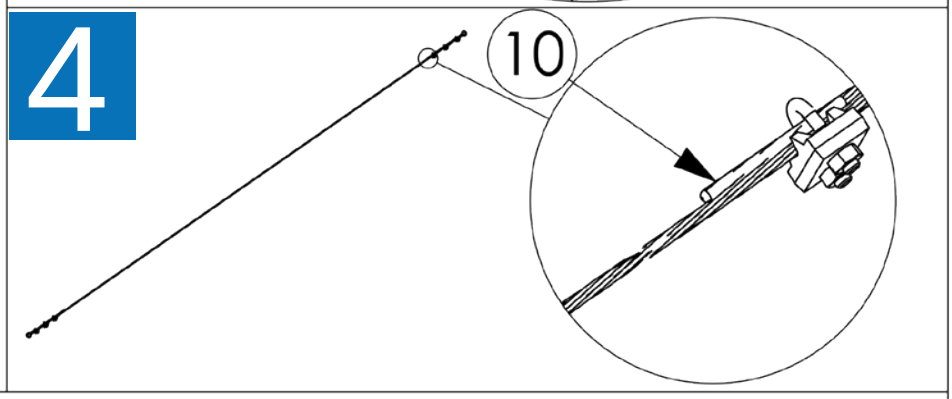
4
10

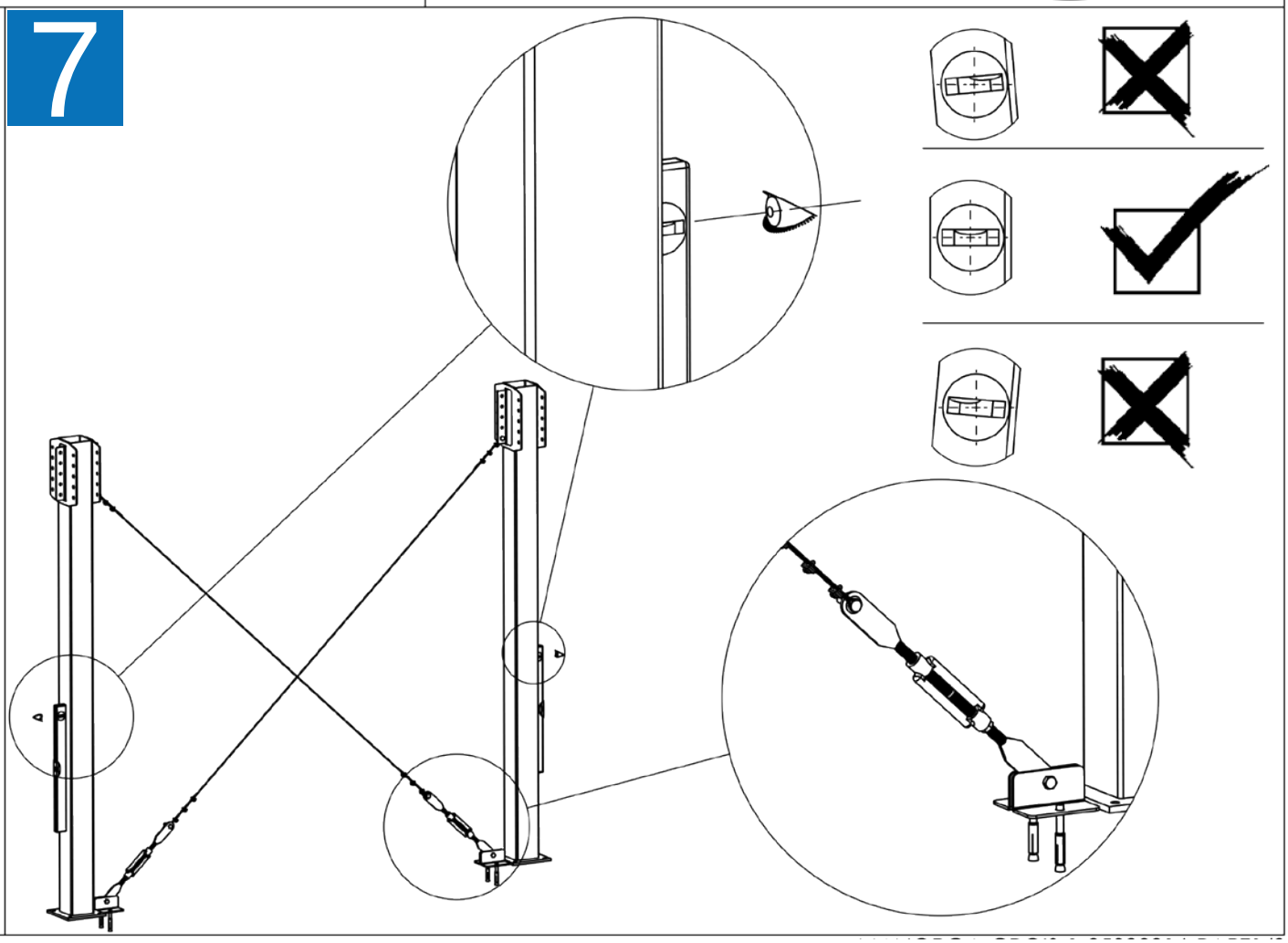
7

Assembly of a multi-tiers mezzanine floor :

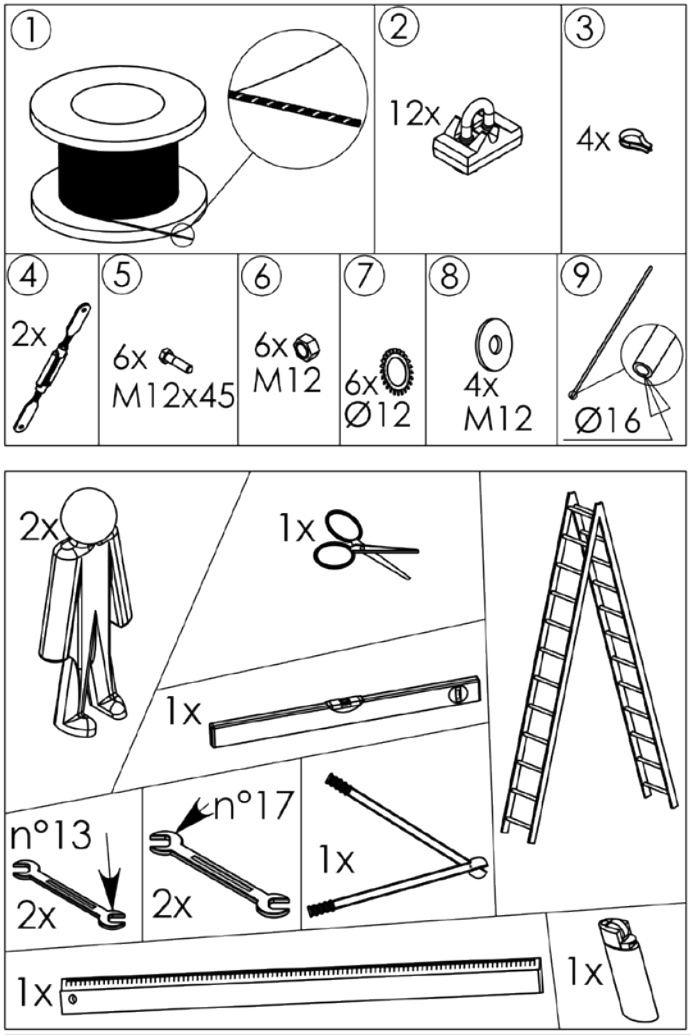

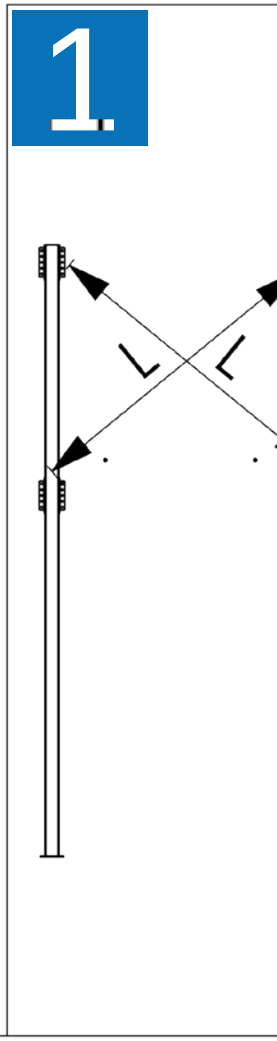

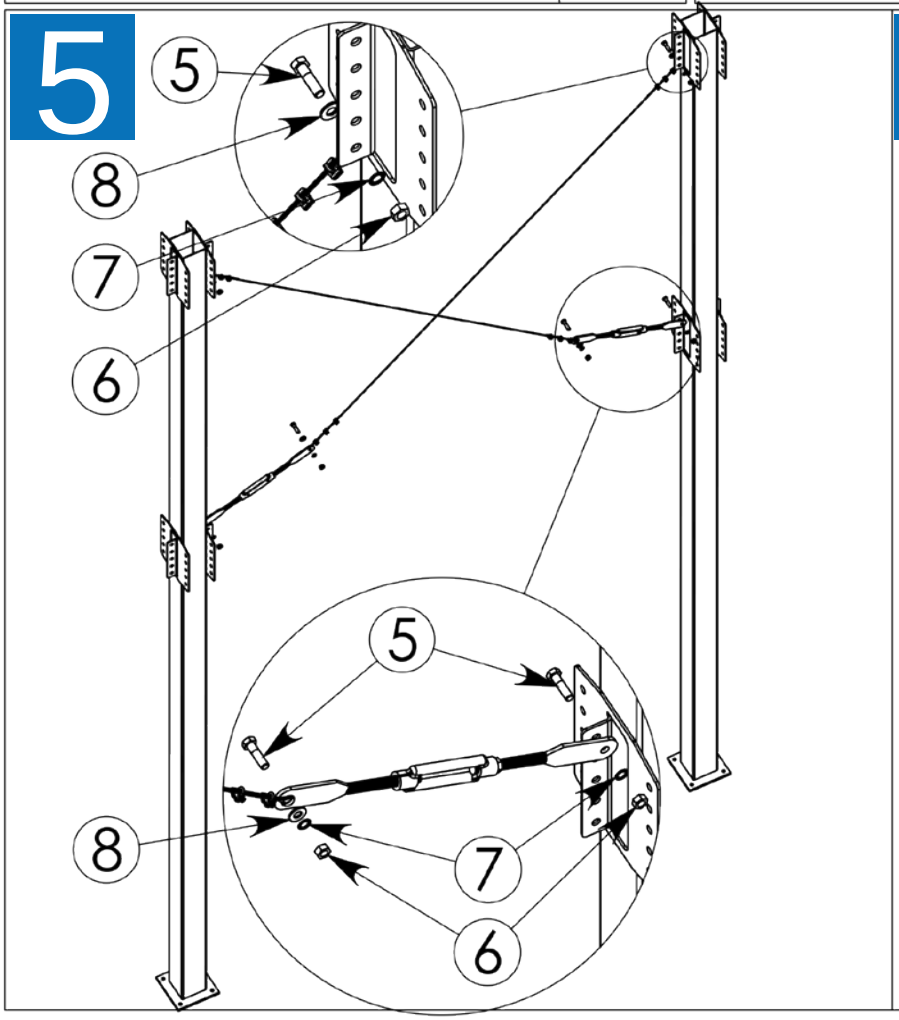

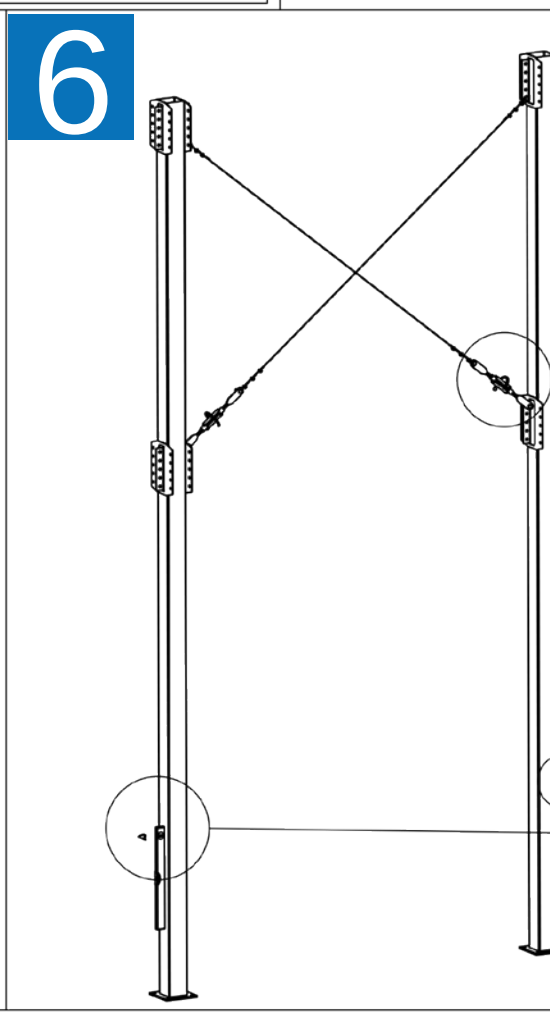

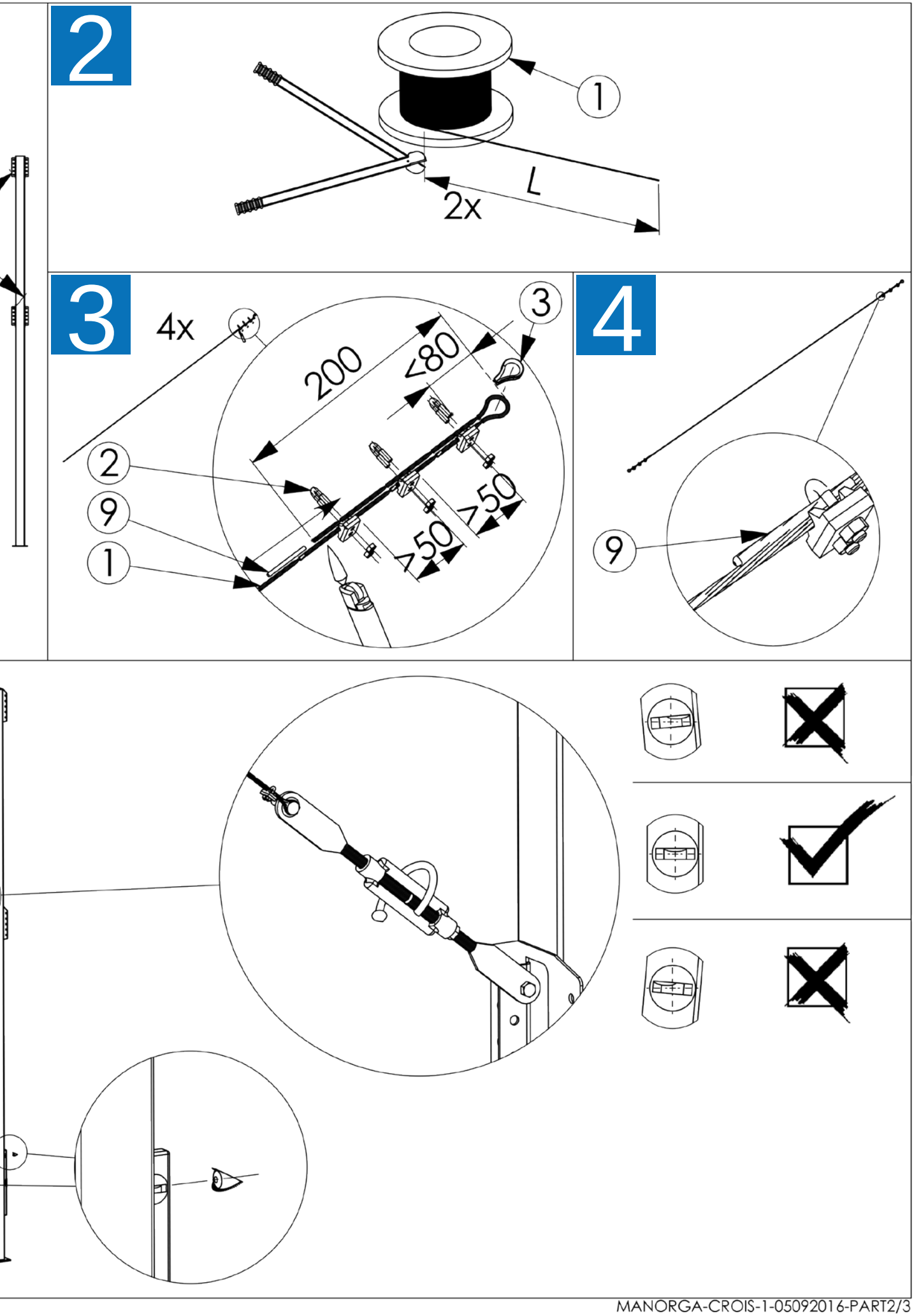
2
1
L
2x
3
4x
200
<80
3
2
9
1
>50
>50
4
9

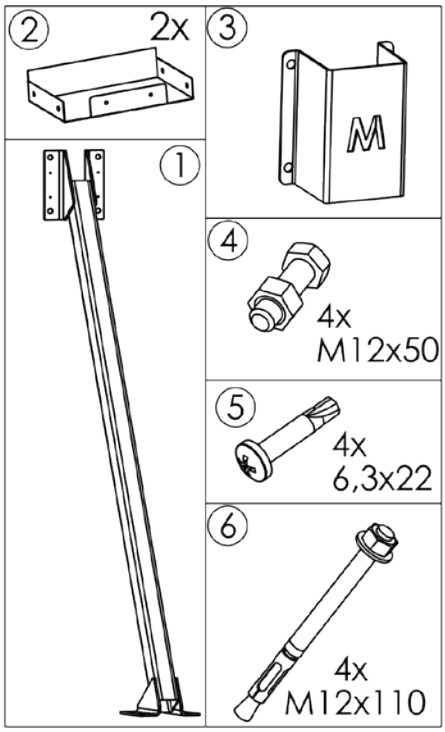
2
2x
3
M
1
4
4x
M12x50
5
4x
6,3x22
6
4x
M12x110

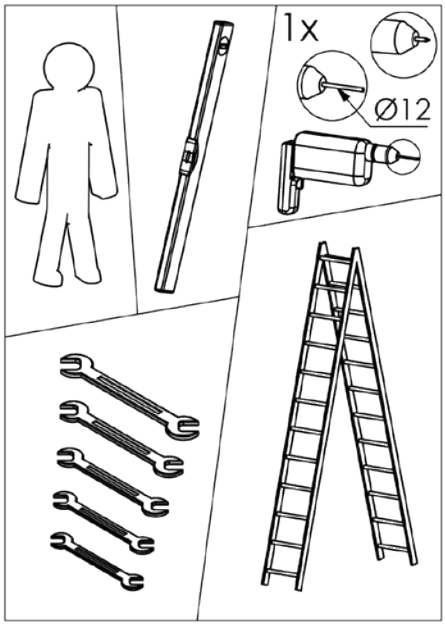
1x
Ø12

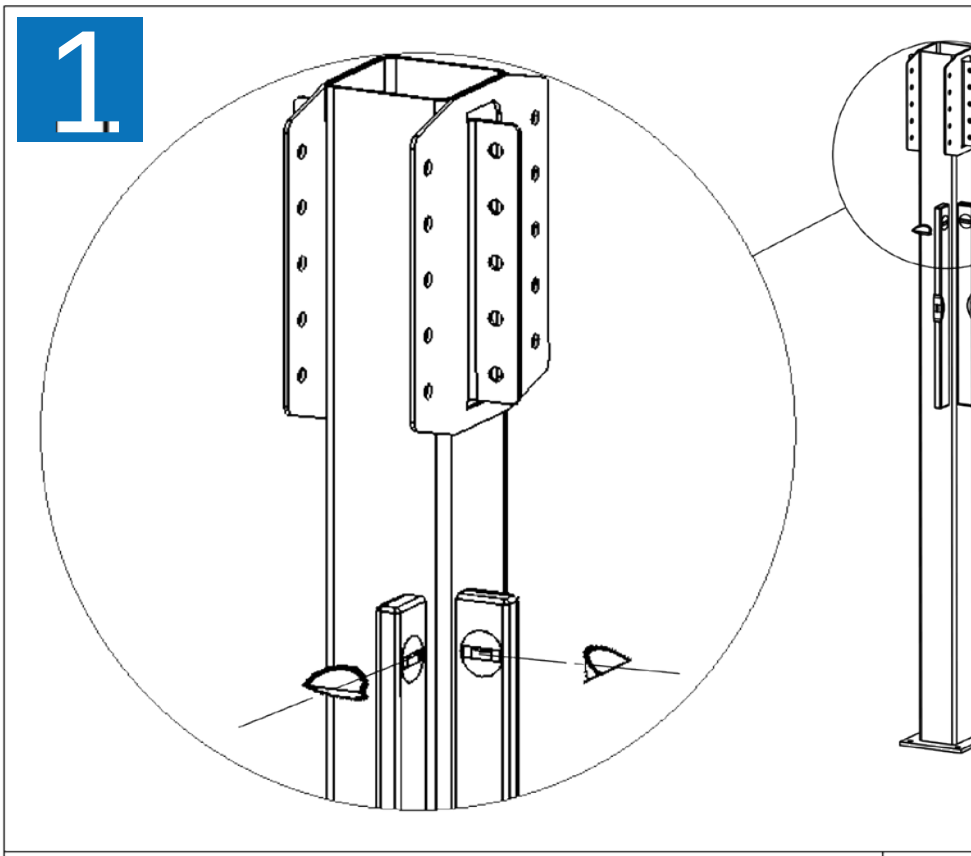
1

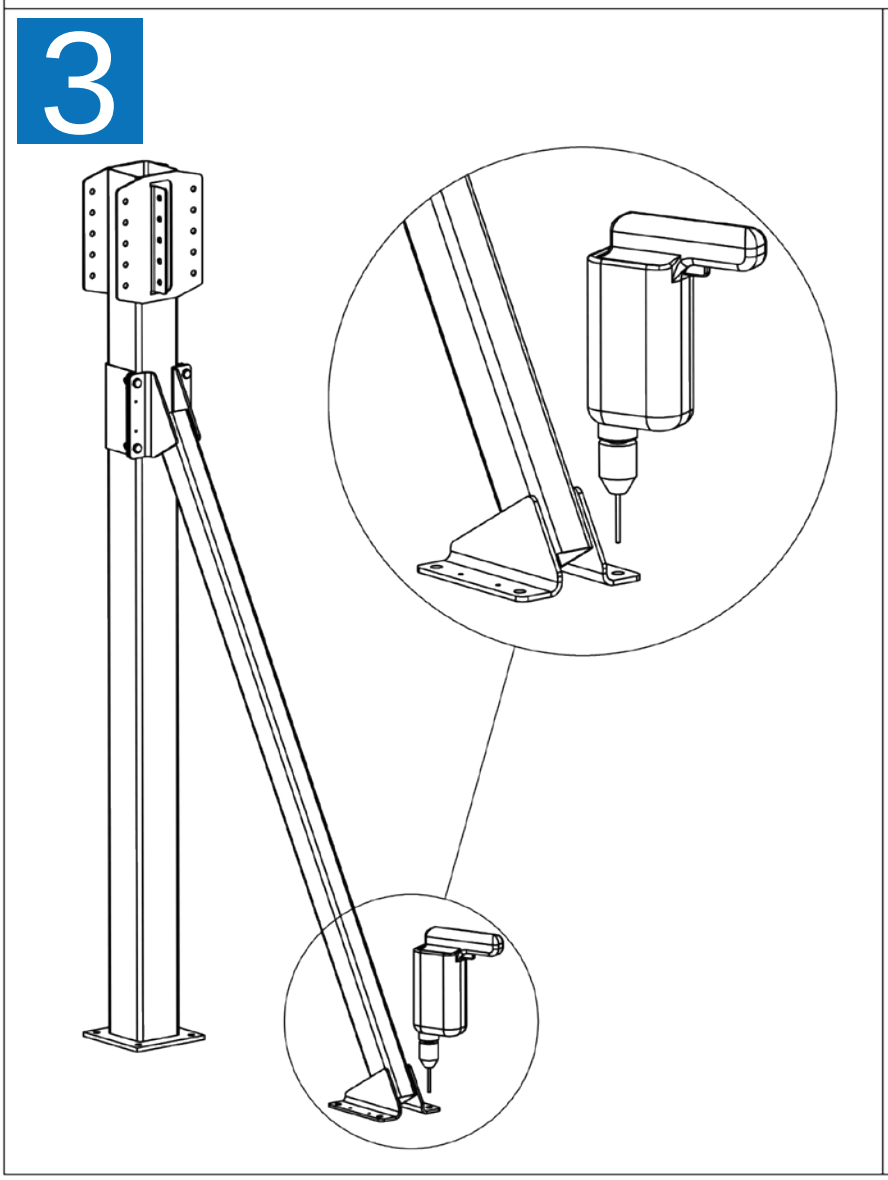
3


4

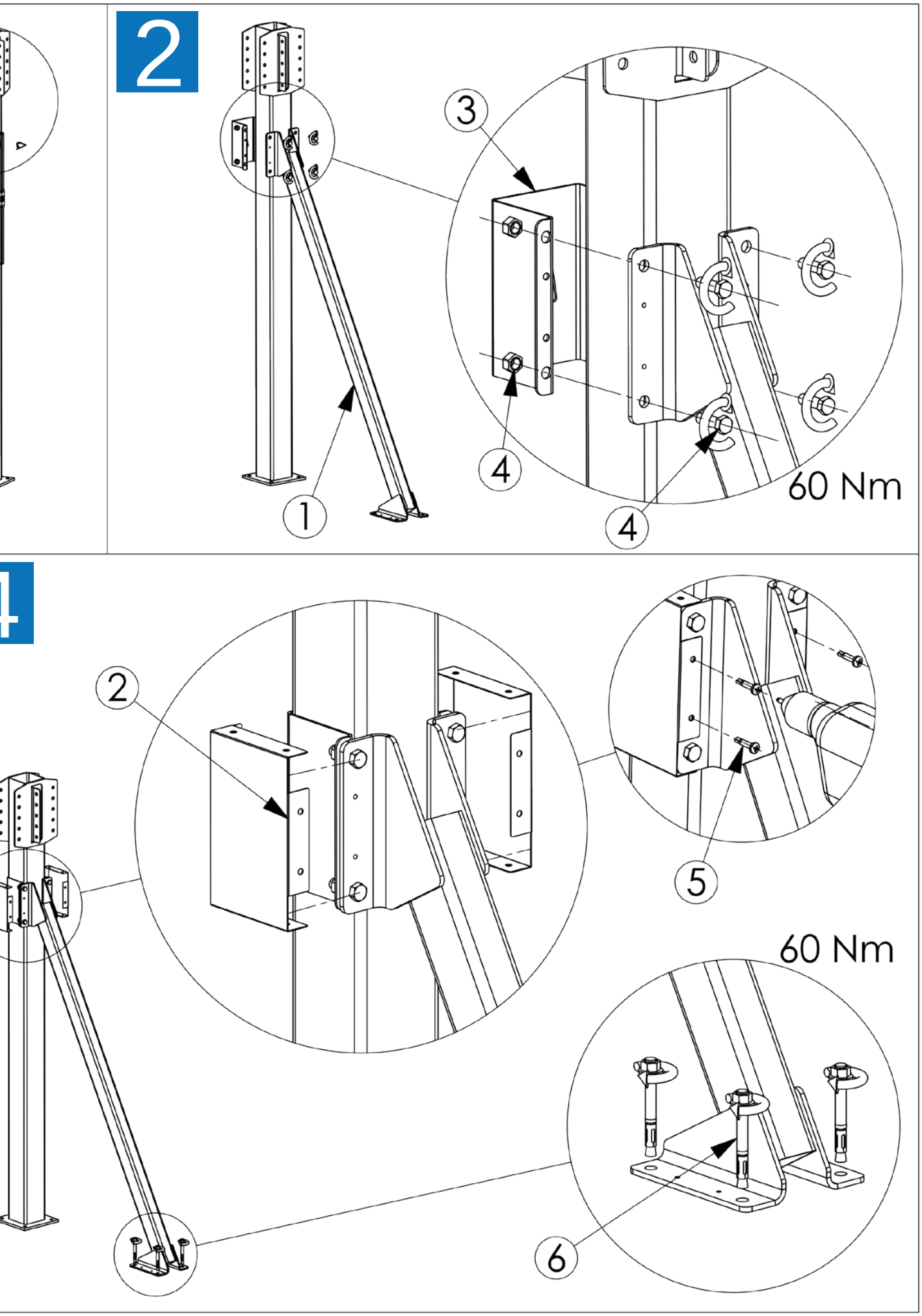
2
3
4
1
4
60 Nm
4
2
5
60 Nm
6

C. Customised assembly, flooring, walings, load plate and EC declaration

1. In case of customised assembly:

a. Overhang

The load-bearing beam is fixed to the upright by a special connector using SB bolt M12, 30 mm long, class 8.8, each with a H nut M12 and a lockwasher (see §I.c).

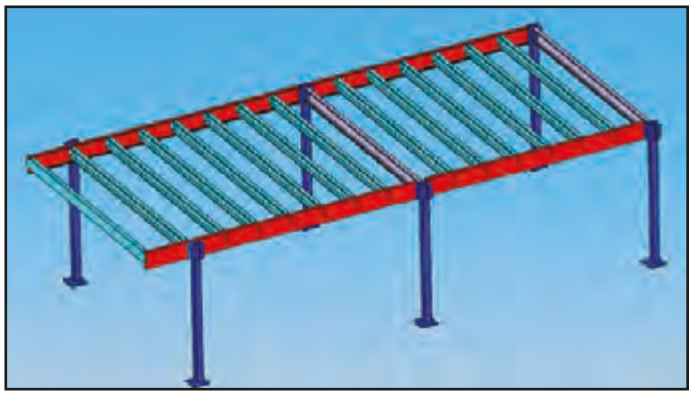

Bias

Assembling the modules on the bias requires the use of corners connectors which must be fixed between the uprights and the beams and between the beams and the joists (SB bolt M12x30 and H nut M12 with a lockwasher, class 8.8). These connectors are marked at the bend angle required.

Take care to observe the assembly plan :
- Position of load-bearing beams on the uprights (with respect to the connectors)
- Orientation of opening of the load-bearing beams and the joists
- Position of corner connector

Example:

Corner connector

Example of assembly plan

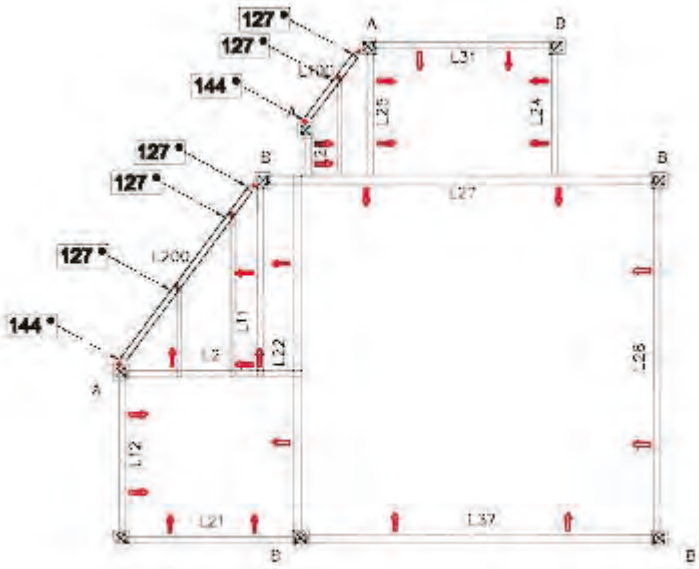

Height of corner connector:

Type	Section	Hauteur du connecteur (mm)	Nombre de boulons *
Joist	150x50x12x2	100	4
Joist	180x50x12x2	100	4
Beam or joist	200x80x30x2	150	4
Beam or joist	250x80x30x2	200	6
Beam or joist	230x80x30x2.5	200	6
Beam or joist	250x80x30x3	200	6
Beam or joist	300x95x30x3	250	6
Beam or joist	350x95x30x3	250	6
Beam	350x100x30x4	250	6
Beam	400x100x30x4	250	6

* Number per beam (SB bolt M12 and nut M12 with serrated lockwasher, class 8.8)

b) Assembly of flooring

The chipboard panels must be assembled in strict compliance with the layout plan provided with the mezzanine.
The panels must be cut and adjusted on site in order to comply with the recommendations and the general plan.

Each panel must rest on at least three supports (possibly two on small areas). The joins of the panels, parallel to the joists, may only be located above a joist and on a support length of at least 20 mm for the slab edges.

The self-tapping screws must be positioned at least 16 mm from the effective edges of the panel (See drawing opposite).
The screw head must sit flush with the upper surface of the flooring.

• **Fix the flooring** onto every beam and joist using self-tapping screws so that there is a minimum of **6 screws/m²** which are sensibly distributed.

• It is essential that each joist and beam be **fixed** using at least one screw every **600 mm** along its length.

Sectional view:

Fixation along the length of the beams and joists every 600 mm

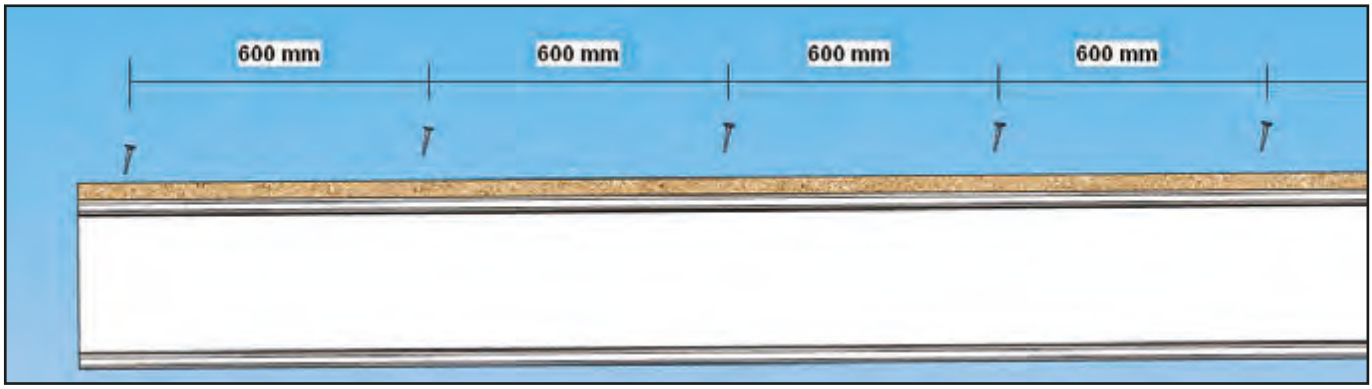

The panels must be laid in a «brick wall» arrangement, taking care to ensure that:

- The layout plan provided is strictly observed.
- Any join between 2 panels is located above and at the centre of the beam or joist.
- Each panel or piece of panel rests on at least 2 supports.
- The panels cover the entire structure and are adequately fixed in place.
- There is no flooring overrun at the top of the stairs.

Horizontal arrangement

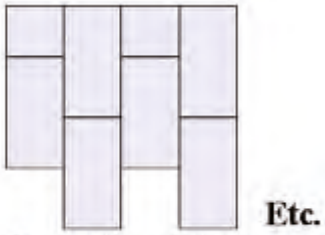

Vertical arrangement

Ensure a chipboard overrun along the peripheral edge of the mezzanine for installation of:

- Railing and safety gate: : minimum 60 mm
- Gate: : 100mm

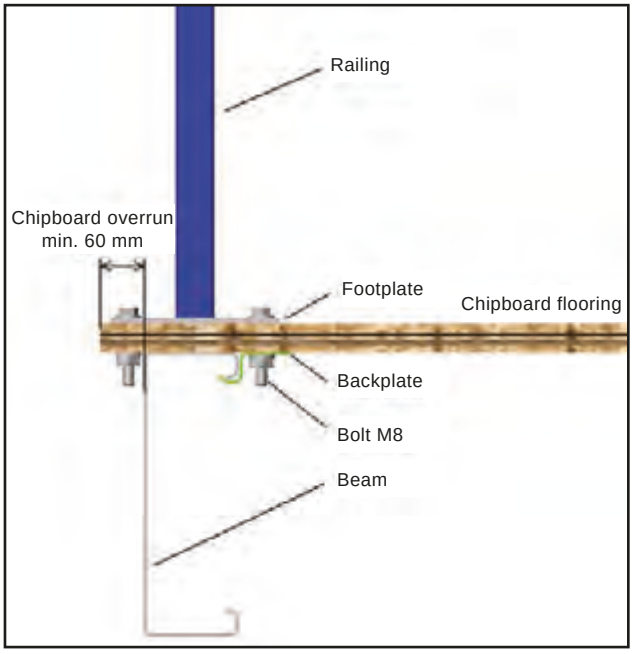

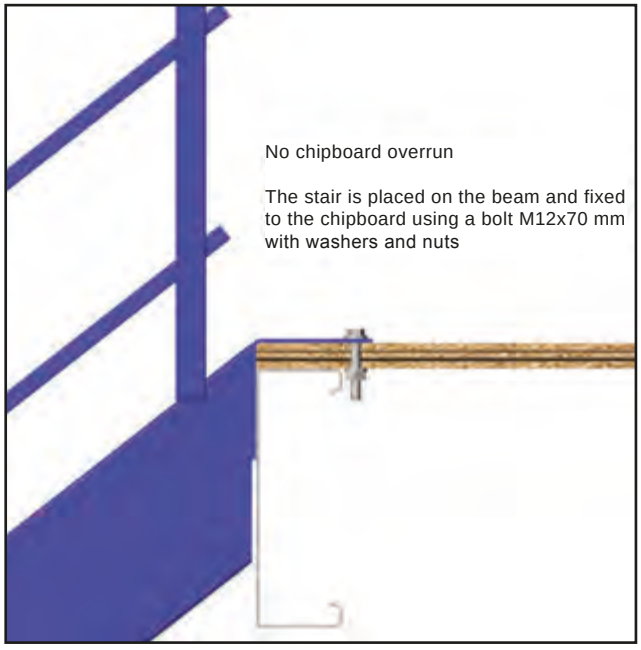

Assembly example

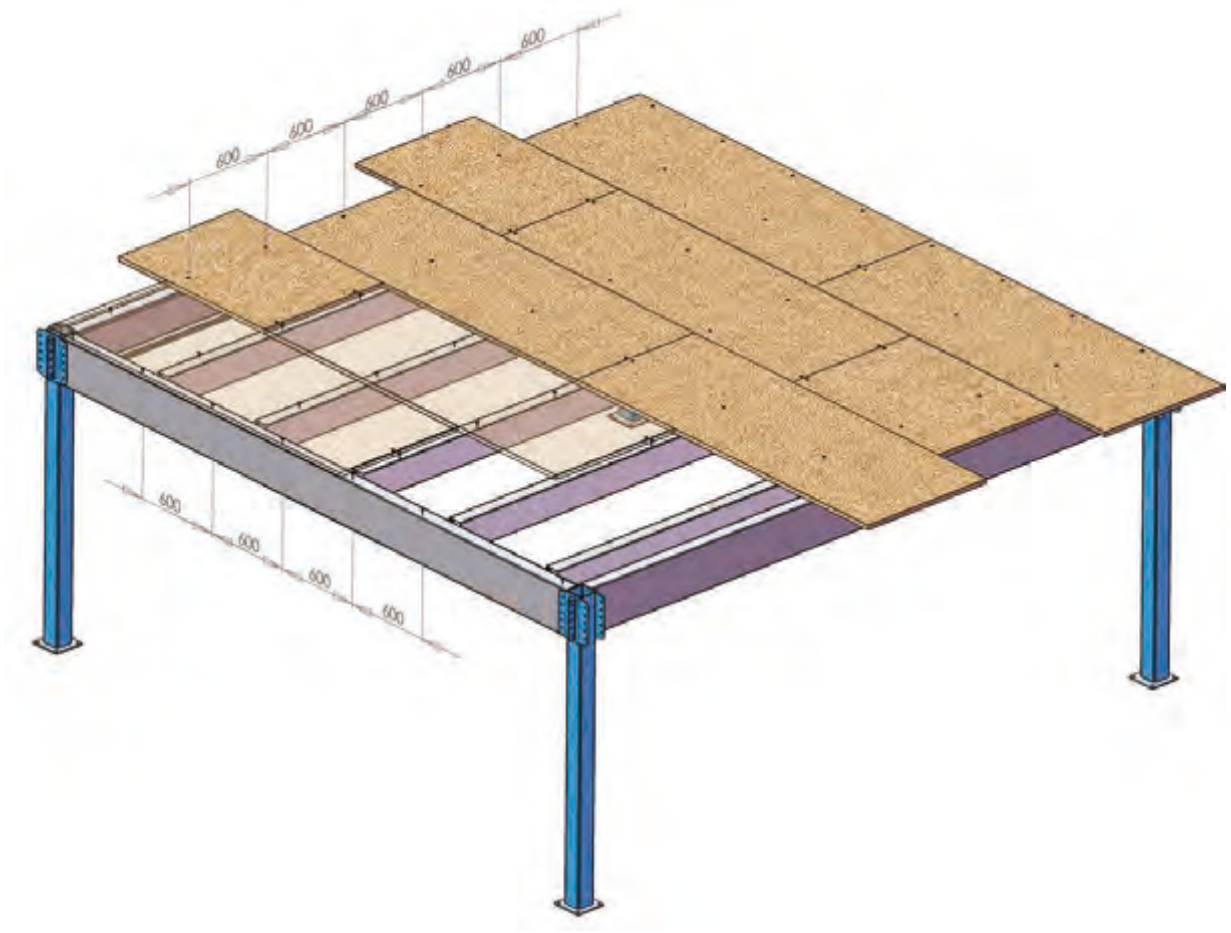

c) Assembly of walings

A waling consists of a threaded rod Ø12 mm, 4 nuts and 4 flat washers.
Depending on the length, the joists will have to receive 0, 1 or 2 walings:

Maximum length (in mm)	Waling
3500	0 - None
5500	1 - At middle of joist
7500	2 - At one third and two thirds along the length

Step 4.6

If the joists have any waling, they will be shown on the installation plan.
Installation is performed as follows:

- **Place** two bolts and two washers onto the threaded rod.
- **Insert** the threaded rod between the joists and place the washers and nuts on the outside of the joists.
- **Tighten** the bolts inside and outside without distorting the joists (the faces of the profiles must remain vertical and parallel!) and make sure they are tightened correctly.

The result should be as shown opposite.

d) Labelling of the load plate and the EC declaration of conformity

Every installation comes with one or more load plates as well as an EC declaration of performance in the form of self-adhesive labels.
These must be clearly and permanently displayed on the mezzanine.
Stick these labels on an upright of the platform in a place where everyone can see them.

Load plate :

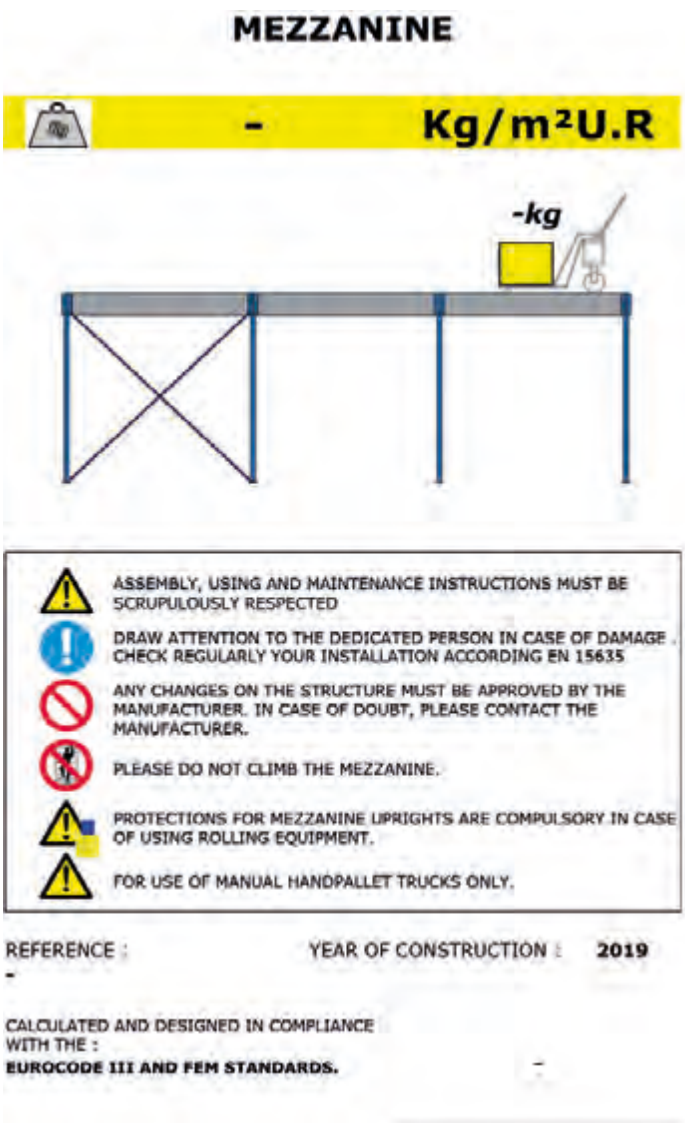

Declaration of performance :

D. Assembly instructions for recessed or superimposed steel trough

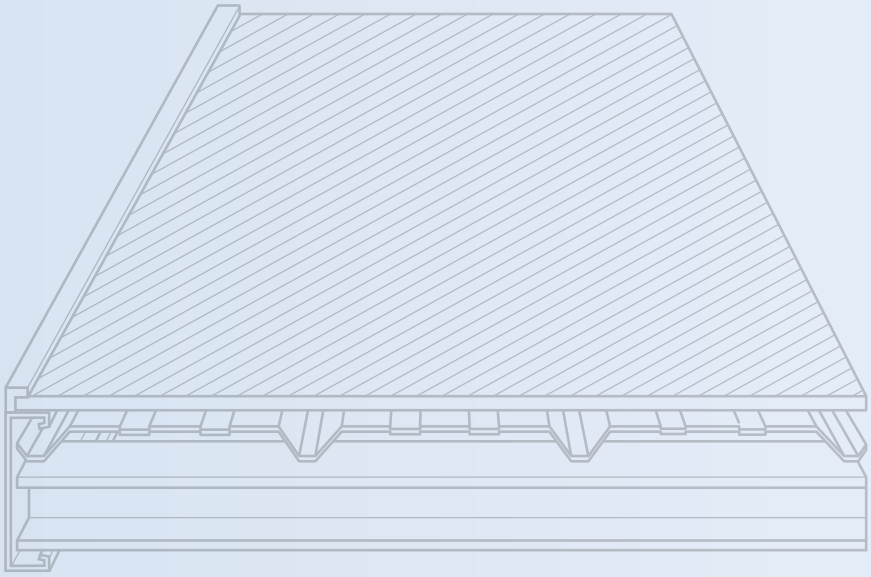

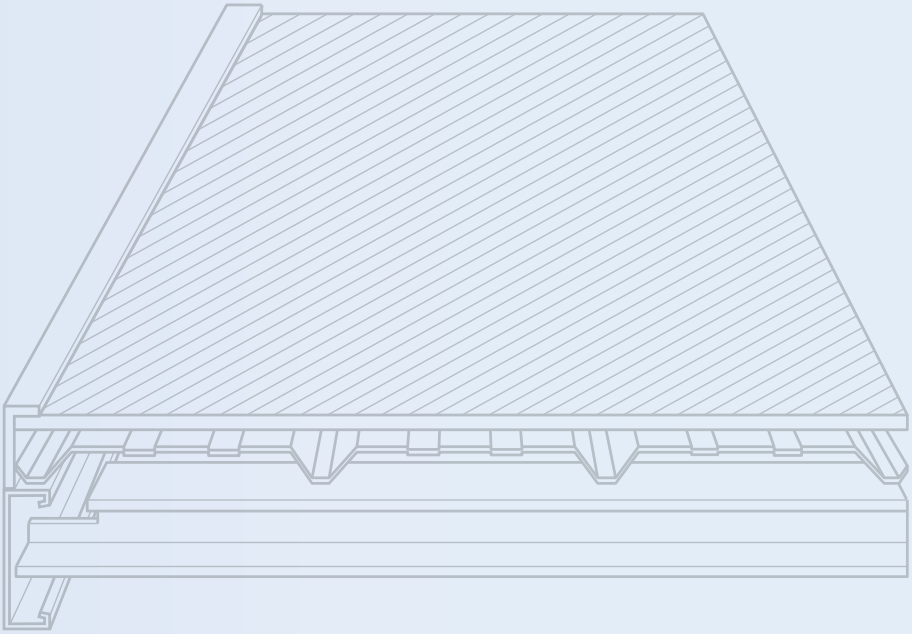

1. Characteristics and assembly principle

We recommend proceeding to assembly of the handrail page 34 before continuing.

Assembly of the two types of steel trough:

Recessed (Mezzaman Smart)

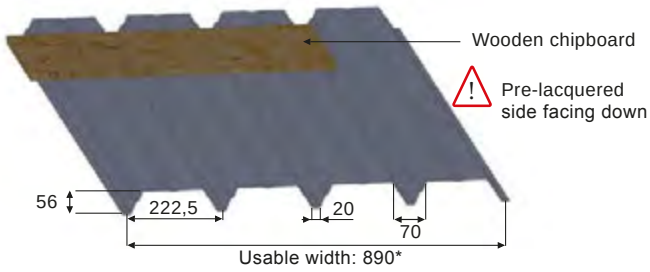

- Fixation with self-tapping screws (1 every 2 waves)

Superimposed (Mezzaman Office)

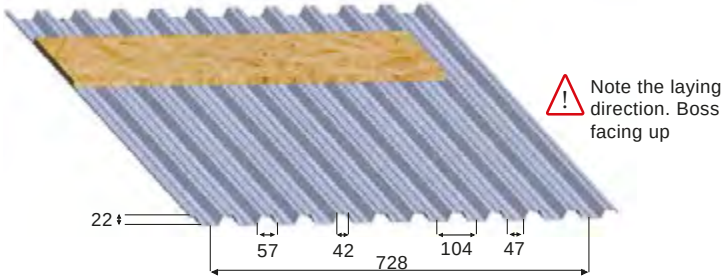

- Fixation with self-tapping screws (1 every 6 waves)

Step 1a

Recessed (Mezzaman Smart)

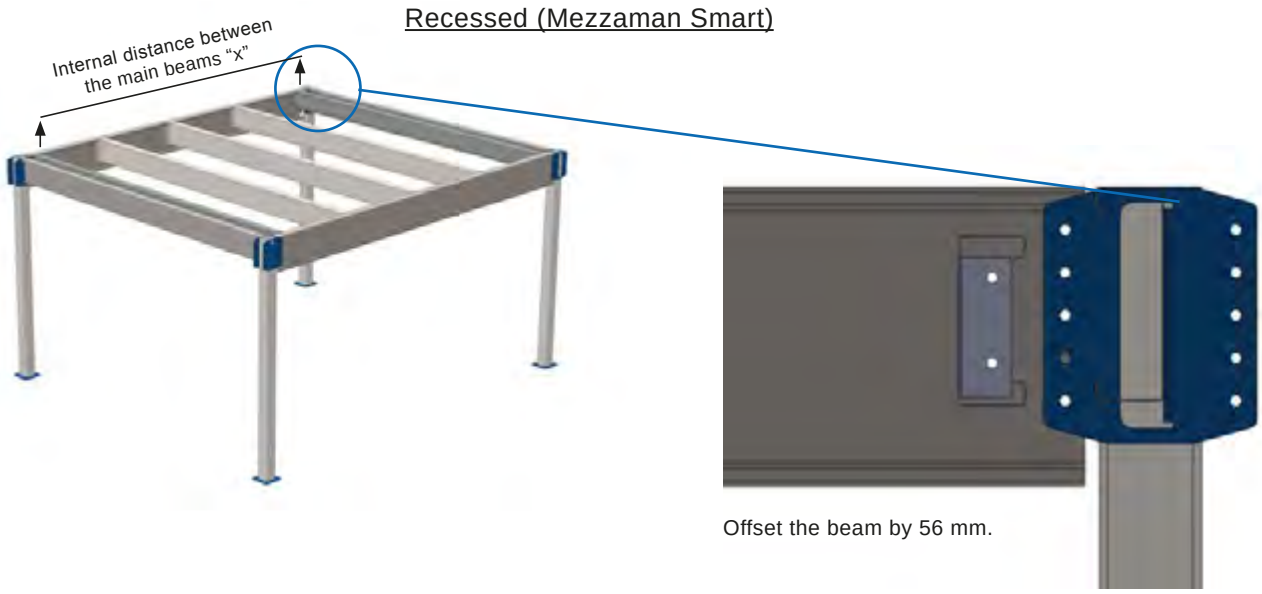

Offset the beam by 56 mm.

Step 1b

Recessed (Mezzaman Smart)

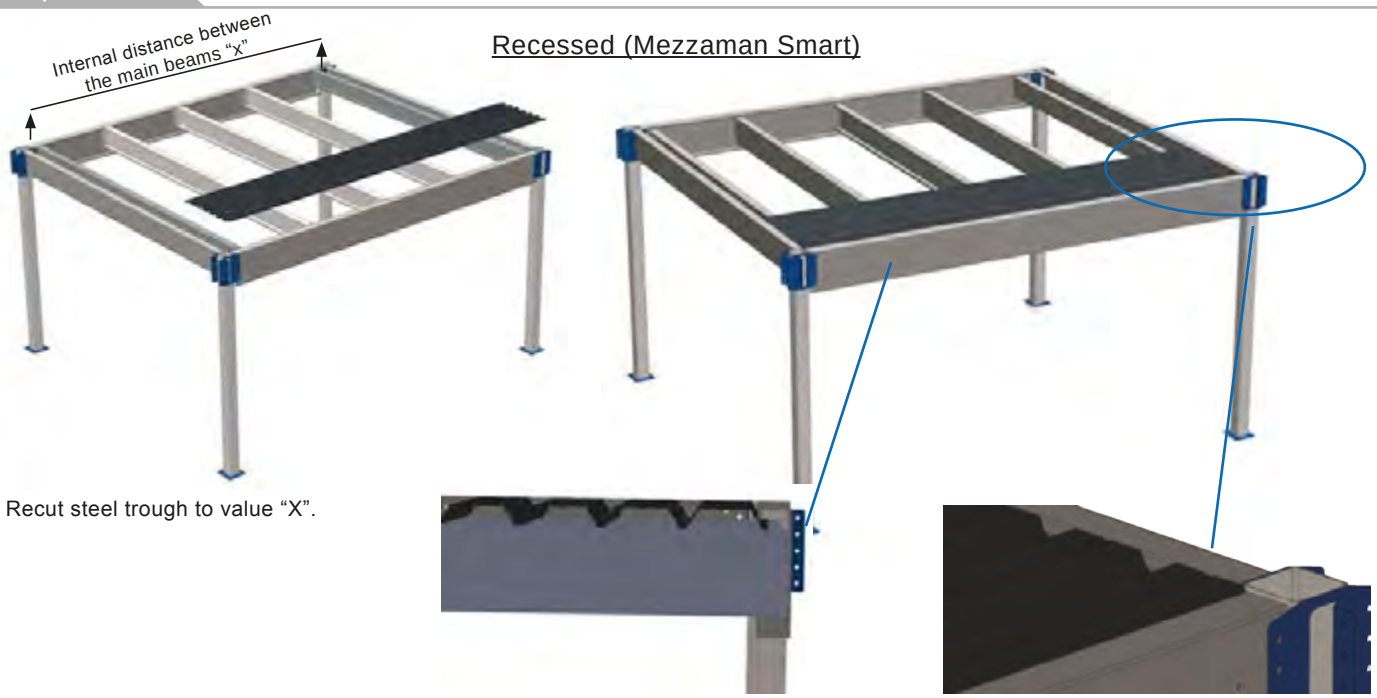

Recut steel trough to value “X”.

Step 2a

Superimposed (Mezzaman Office)

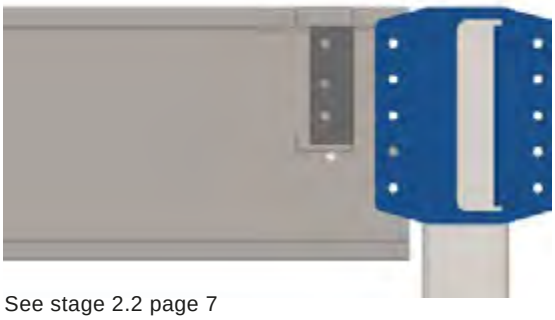

See stage 2.2 page 7
(Assembly/positioning of beam/upright).

Step 2b

Superimposed (Mezzaman Office)

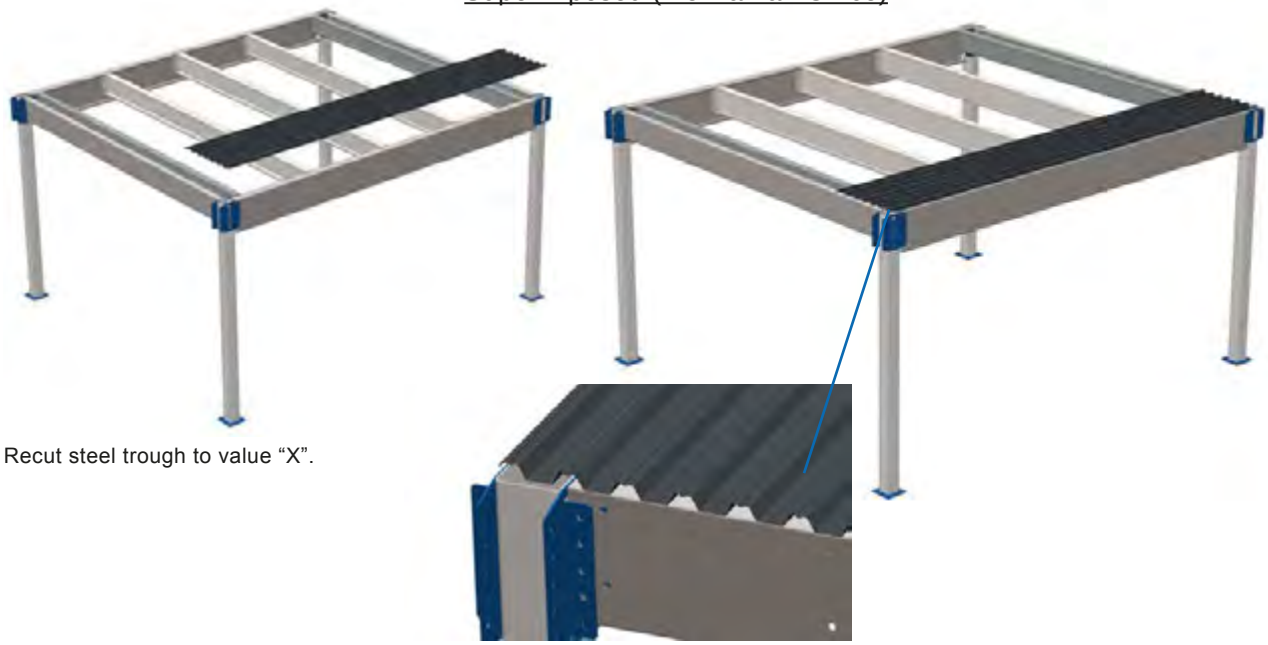

Recut steel trough to value “X”.

Step 3

Recessed (Mezzaman Smart)

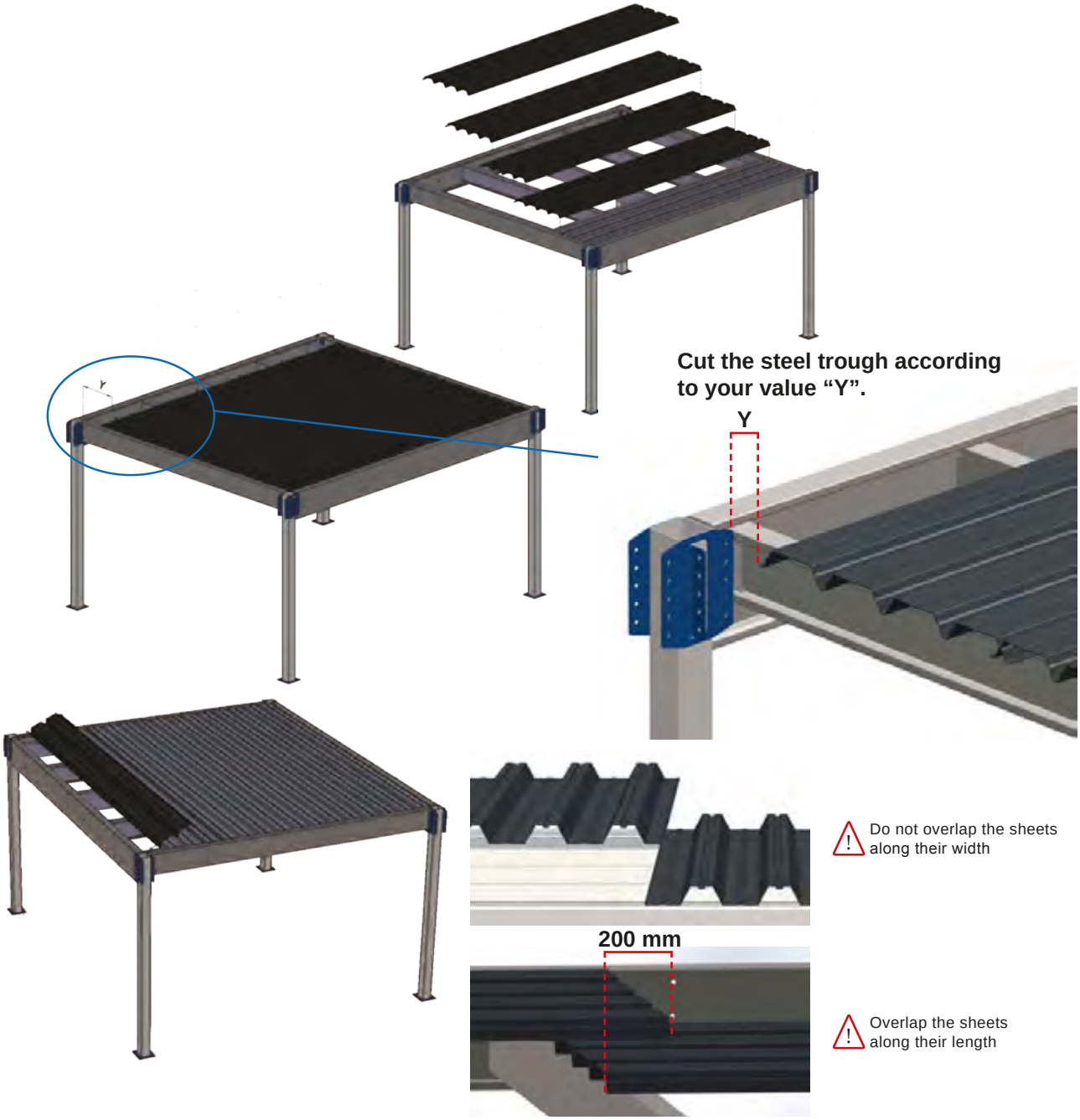

Step 4

Superimposed (Mezzaman Office)

Proceed as per stage 3 making sure to cut the value «y» according to the following diagram.

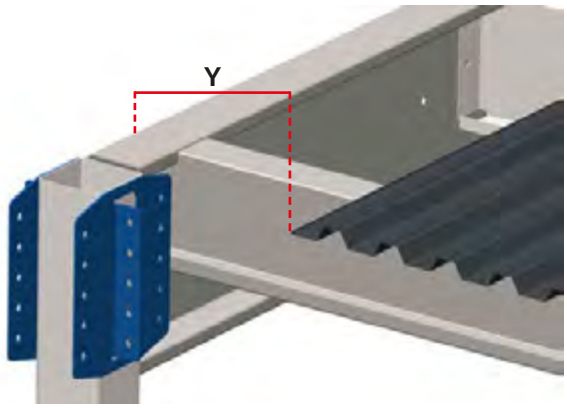

Overlap the sheets along their length.
Do not overlap the sheets along their width.

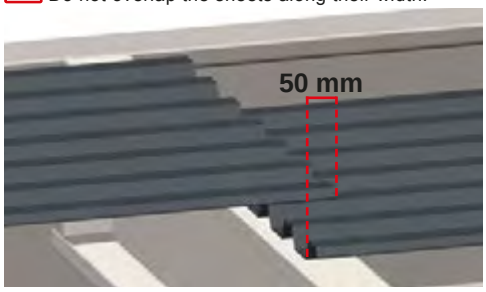

Step 5

Fix the steel trough

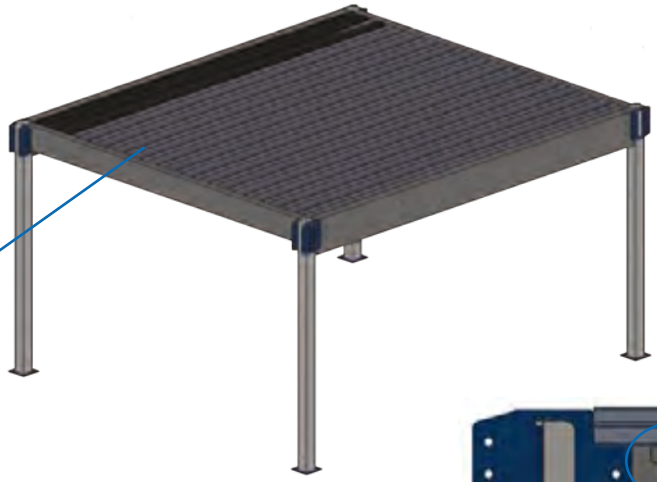

One screw every 2 steps (recessed trough version) and 6 steps (superimposed trough version)

Screw onto the beams and supports only.

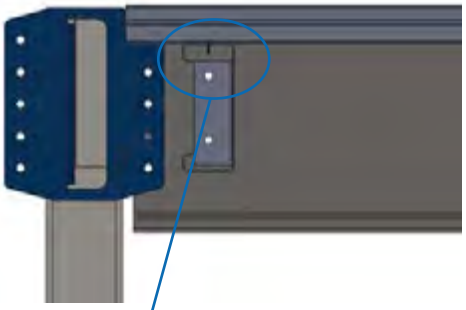

TCB Phillips-head self-tapping screw Ø4.2x19 ISO 15481

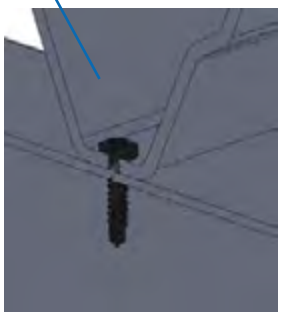

Support

Step 6

Proceed to placement of the chipboard panels according to the layout plan provided and page 23.

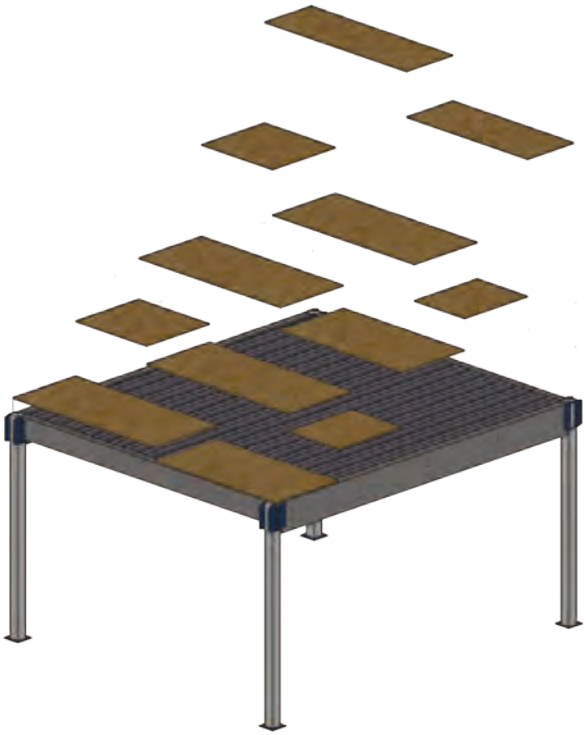

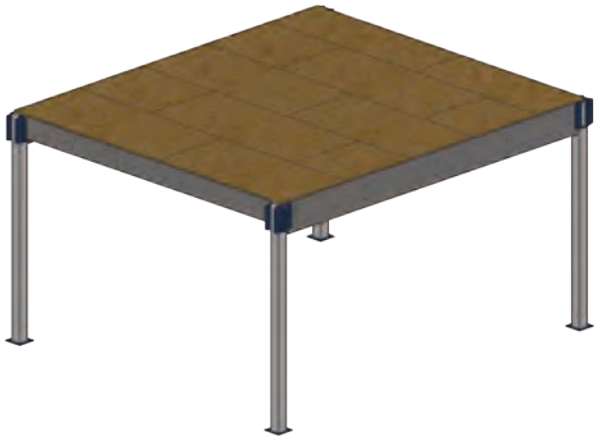

Step 7a

Recessed (Mezzaman Smart)

Fix the chipboard panels around the edge of the platform and at the ends of each panel.
See stage b page 23: floor assembly.

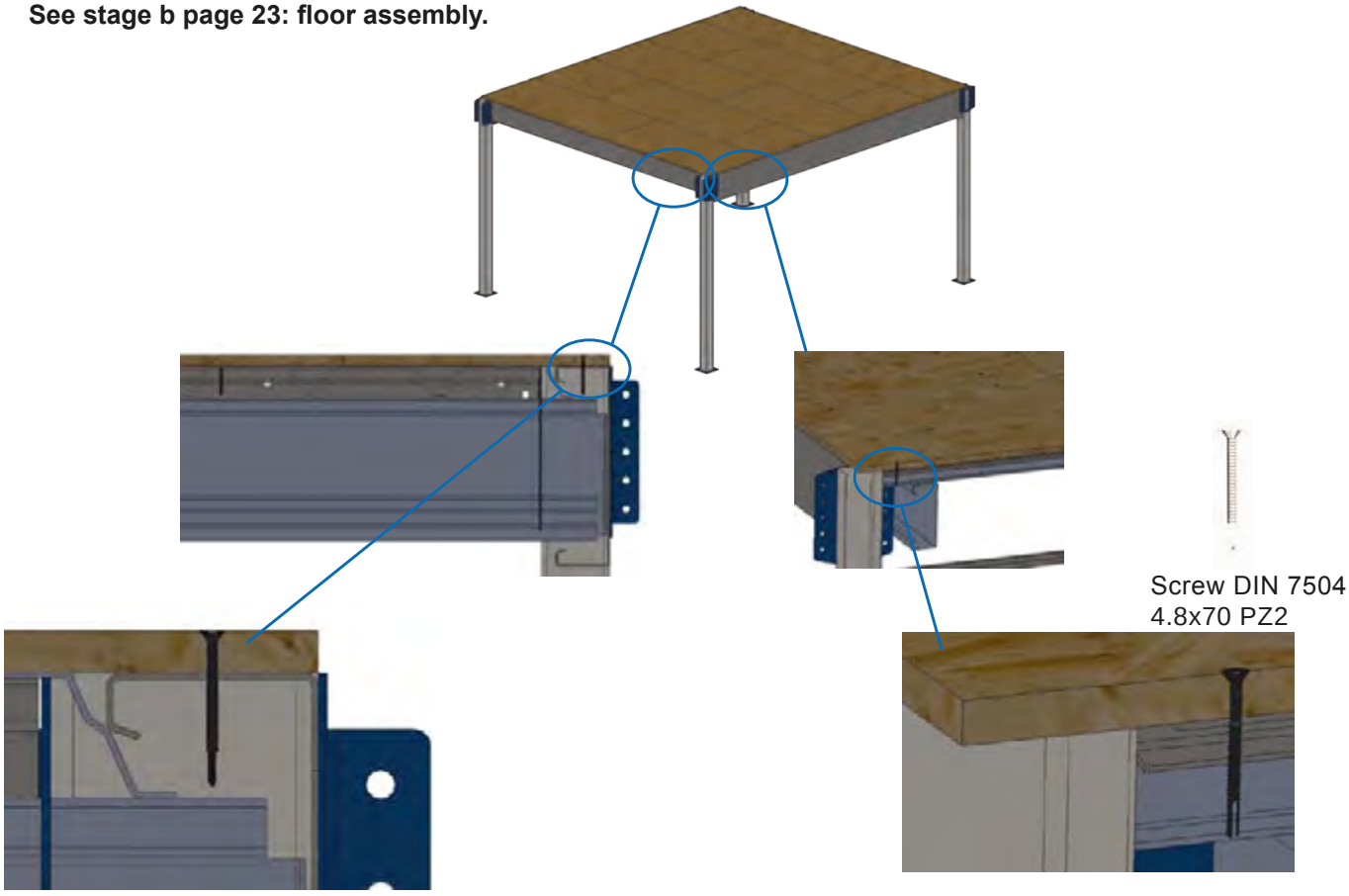

Step 7b

Superimposed (Mezzaman Office)

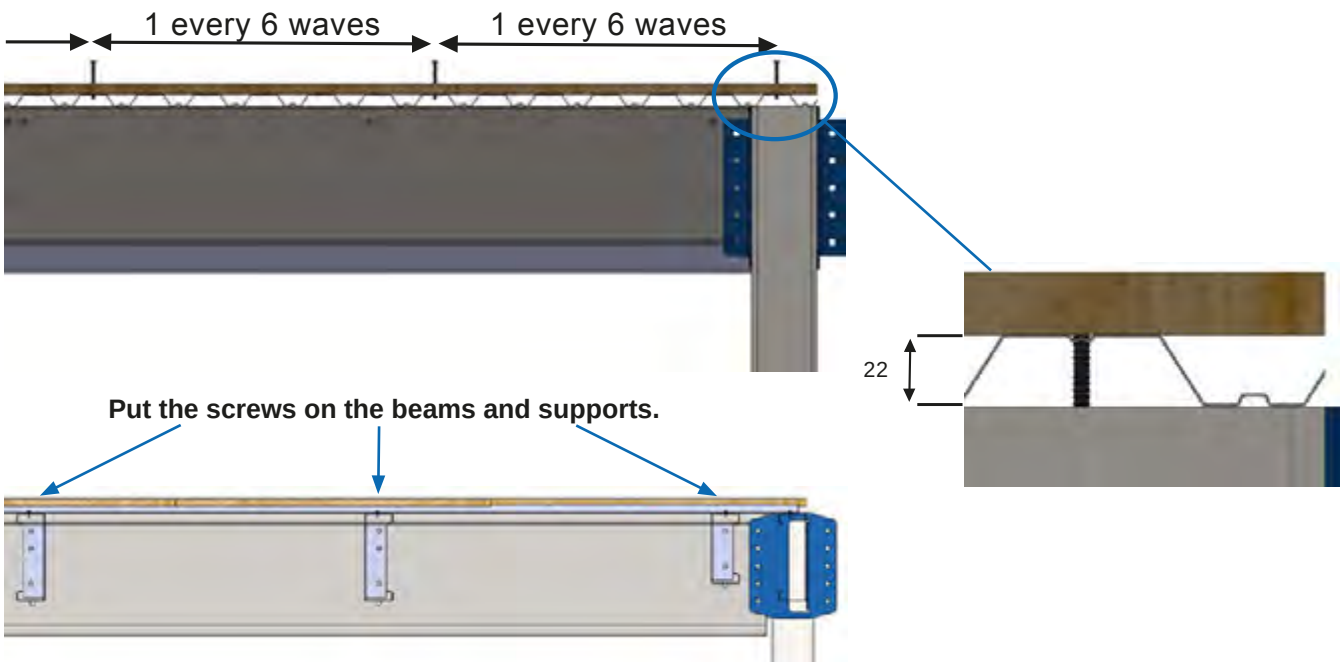

D. Assembly instructions Stairs

1 x1	2 x1	3 x1
4 x X	5 x X	6 x X
7 x 2	8 x 2	9 x 2
10 x 12	11 x 4	12 x 2
13 x 2	14 x 2	15 x 2

Marche, vue de profil :

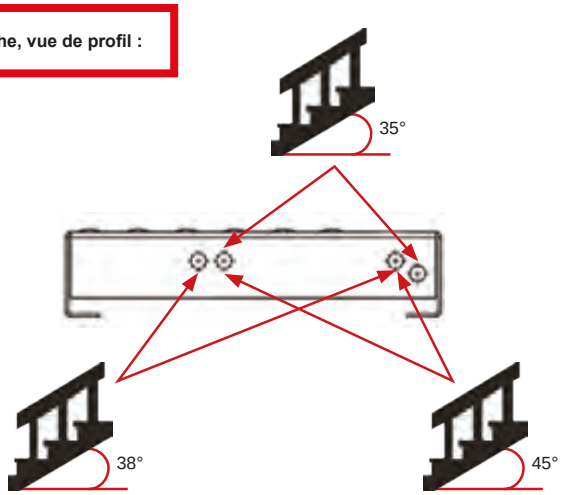

Step 1

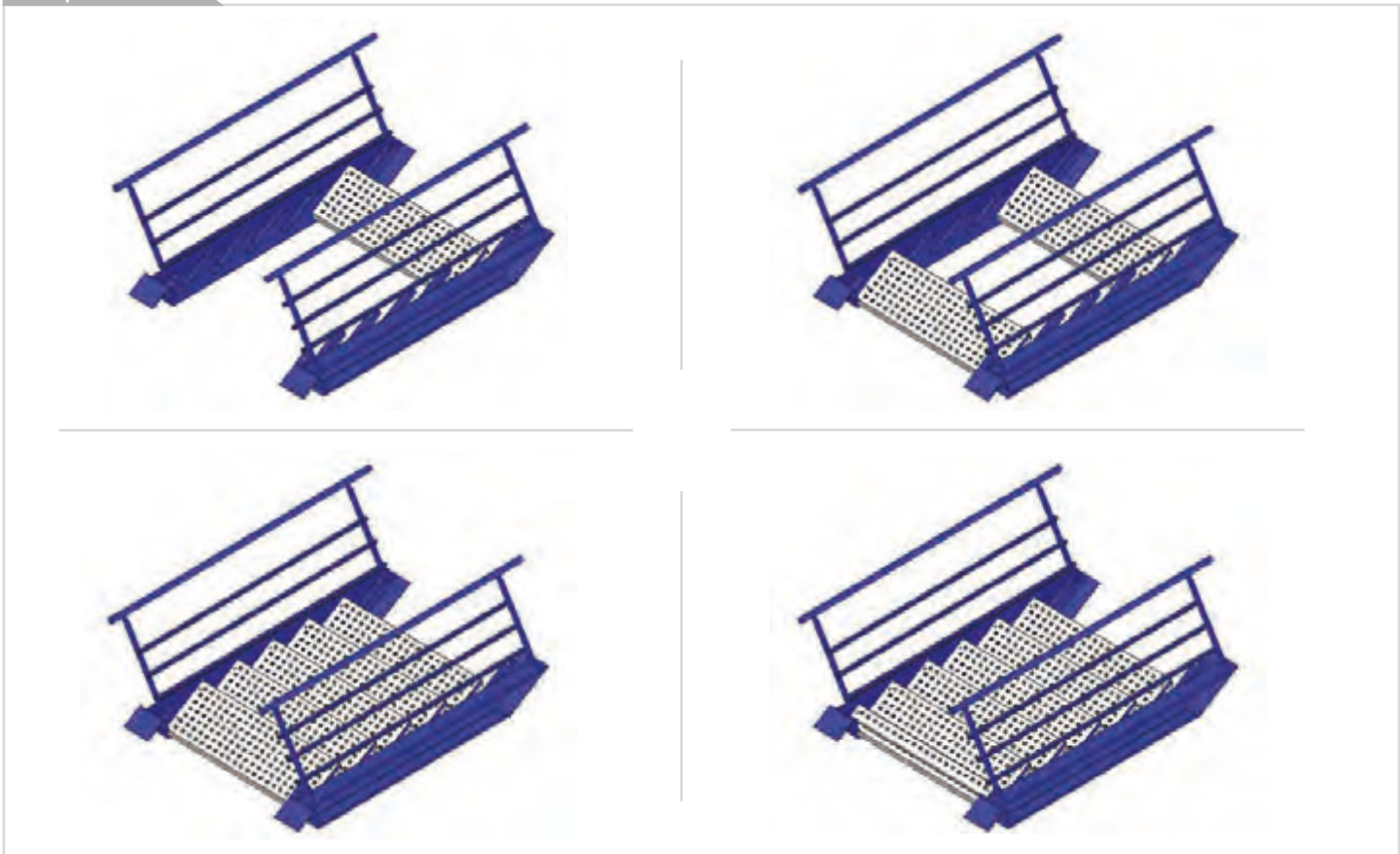

d) Assembling instruction for the stairs

Step 2

To make sure that the fixations at the top of the stair are supported by a beam (and not by a chipboard Hanging over the structure).

- **The stair is fixed on the ground with inking bol ts and on the floor with bolts Ø 13.**

Place the first step of the stair

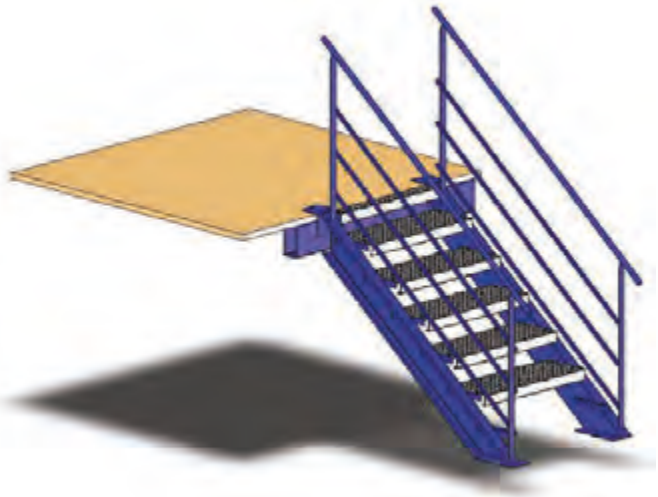

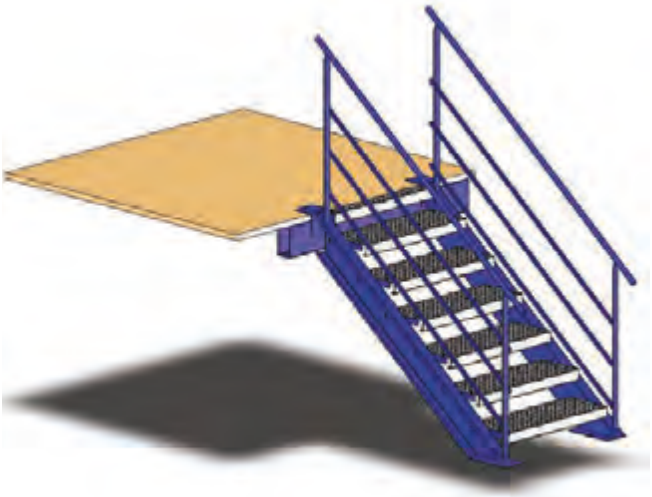

e) Handrail ends (in option)

Contents of the kit:

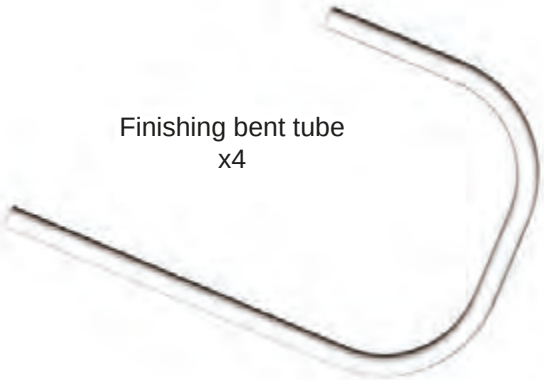

Finishing bent tube
x4

Self tapping screw
x8

Screw TRCc m6x20 + nut M6
x4

Fitting lug
x4

Installation of the handrail ends:

Step 3 **Cut of the bent tubes:**

- For a 45° stairs, no cut on the top bent tube, cut C= 200 mm on the low bent tube (Picture A)
- For a 38° stairs, cut A = 120 mm on the top bent tube, cut B = 200 mm on the low bent tube (Picture B)

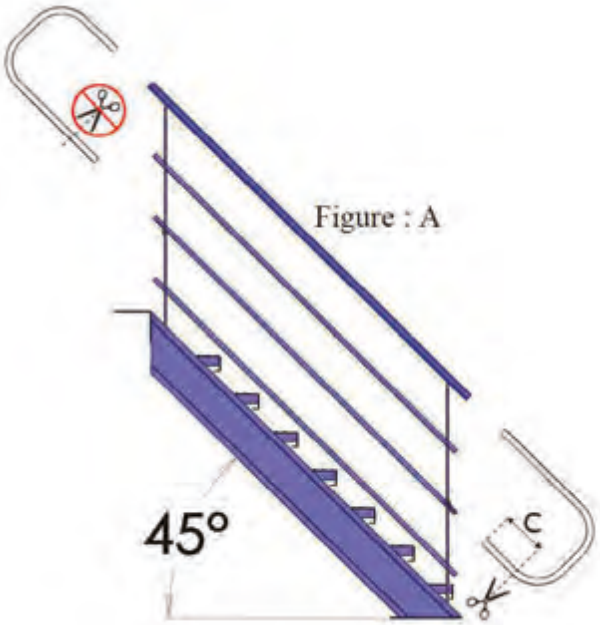

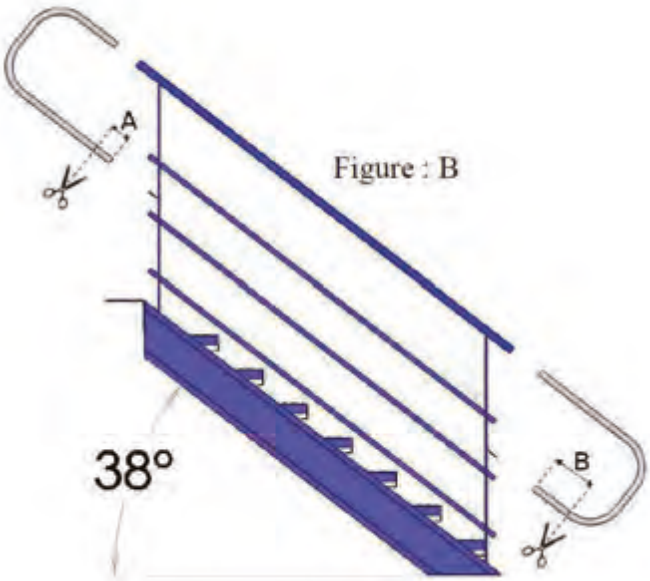

Step 4 Fixing of the ending

- Insert the bent tube in the handrail

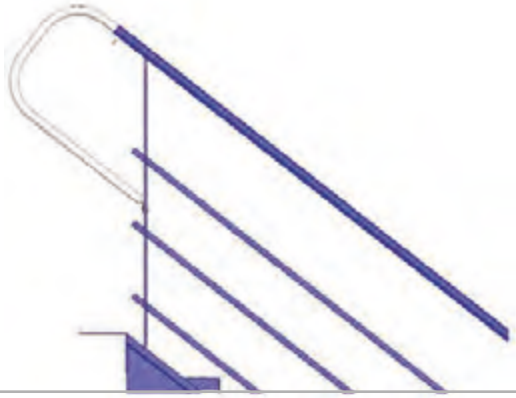

Step 5

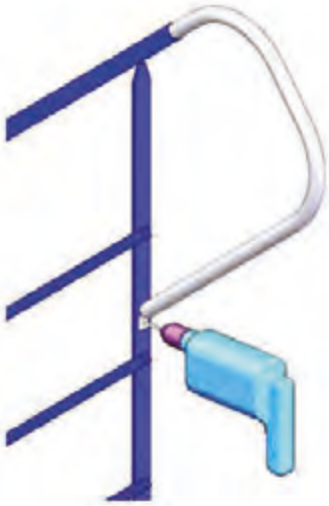

- Set the anchoring clamp, mark a hole and drill with a 7 mm bit, fasten with the screws TRCc M6X20 and the nuts supplied.

Step 6

- Fasten the top and low bent tubes with the self-tapping screws supplied.

Conditions for installation and erection

The stair has to be fixed on a floor which the minimum strength mustcorrespond to the one of a concrete floor with resistance typ C20/25.

Each string-board of stair wedge is fixed on the floor with a inking bolt M12-40/100. The gap between the axle of the bolt and the edge of the slab or a sawing mark must be at least 60 mm. You will find hereafter the conditions of the bringing into play of these bolts.

The floor on which the platform and the stair will be fixed must be flat without holes or without considerable differences in level which could prejudice the inking of the bolts or the assembly tolerances.

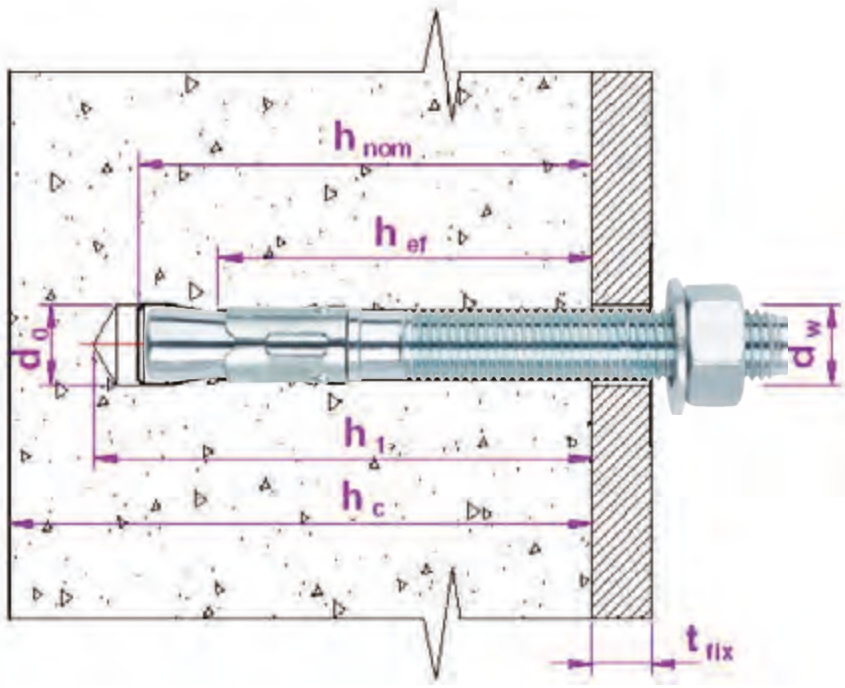

METRIC		M12
Code		AH12XXX
d_0 : Socket diameter	[mm]	12
h_1 : Drilling depth	[mm]	85
h_{nom} : Installation depth	[mm]	77
h_{ef} : Effective depth	[mm]	65
h_c : Minimum thickness of the base material	[mm]	130
T_{fix} : Maximum thickness to be fixed	[mm]	L-92
D_w : Diameter of the metal sheet	[mm]	14
T_{ins} : Tightening torque	[Nm]	60
S_{er} : Critical centre-to-centre distance	[mm]	195
C_{cr} : Critical distance to edge	[mm]	98
S_{min} : Minimum centre-to-centre distance	[mm]	85
C_{min} : Minimum distance to edge	[mm]	85

Maintenance and guarantee

Maintenance:

The steel-structure of the stairs can be cleaned with chlorine-free detergent. The users have to check yearly the tightening of bolts of the structure.

Modifications of the structure:

Any changes of the structure in relation to the drawing made initially and even the change of one component of this structure or/and its accessories must be approved before by MANORGA.
Moreover, in case of impact, if the structure or one accessory shows cracks or bendings, the use of this mezzanine must be stopped. The owner and/or the user had to ask to a competent organism for checking the consequences of the impact for the mechanical resistance of the structure and its accessories. This at the charge of the owner/user. He has also to replace the faulty pieces.

2. Characteristics and assembly principle of stairs/handrail composition for Mezzaman Office and Smart

1  Slotted flange nut M10	10  Top step
2  Screw M12 x 25 TRHC	11  Bottom handrail: 1 right + 1 left
3  (2) Pin of ANCHORING STUD M12X110	12  Special half-module handrail: 1 right + 1 left
4  (2) Screw H M12 x 110 Standard handrail	13  Standard handrail
5  (2) Washers M12	14  Top handrail: 1 right + 1 left
6  Screw CHC M10 x 80	15  Cut kit: 1 right + 1 left
7  CHC M10 x 30	16  Platform beam
8  Counter plate	17  Standard half-module handrail: 1 right + 1 left
9  Step	

Step 1

Assembly of stringers on platform

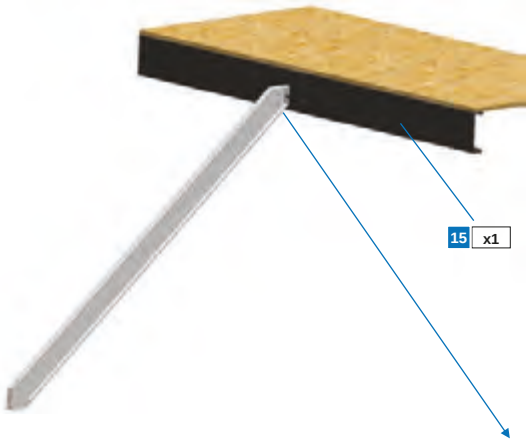

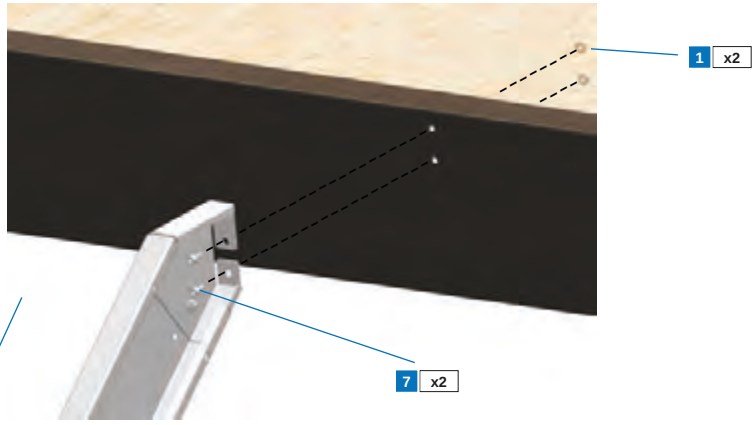

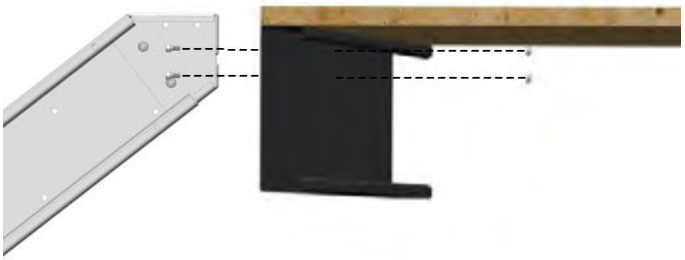

Step 2

Assembly of first step

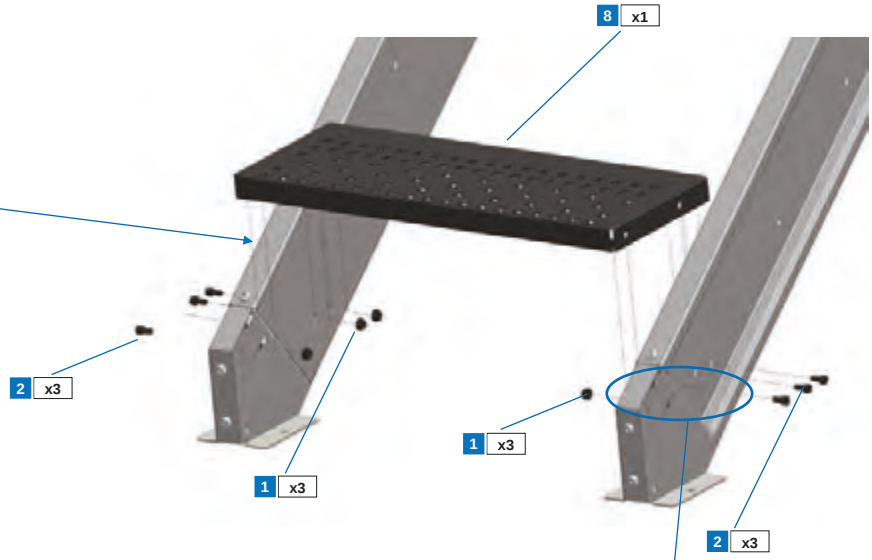

Screw hole

Step 3

Assembly of next steps, excl. top step.

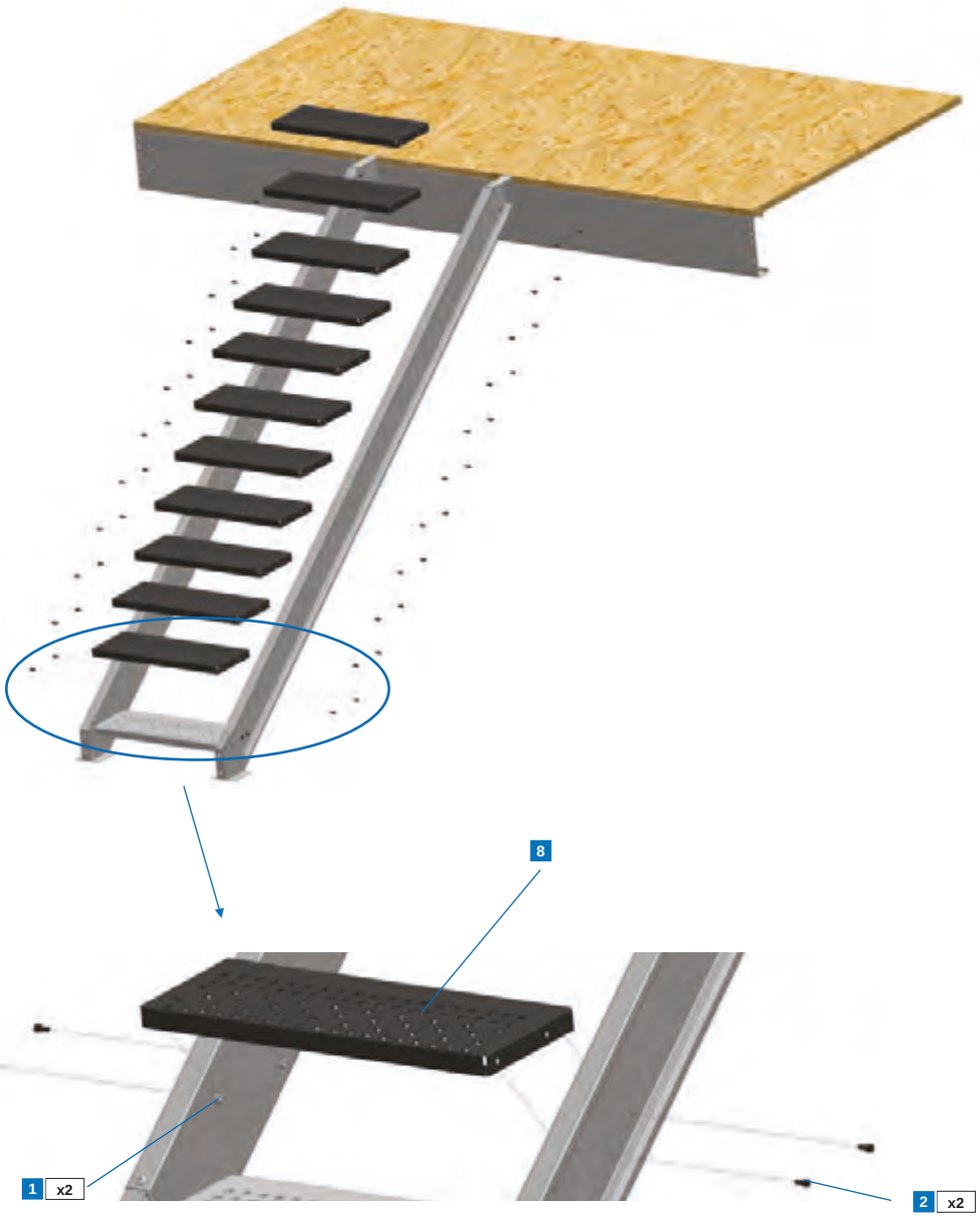

Step 4

Assembly of top step.

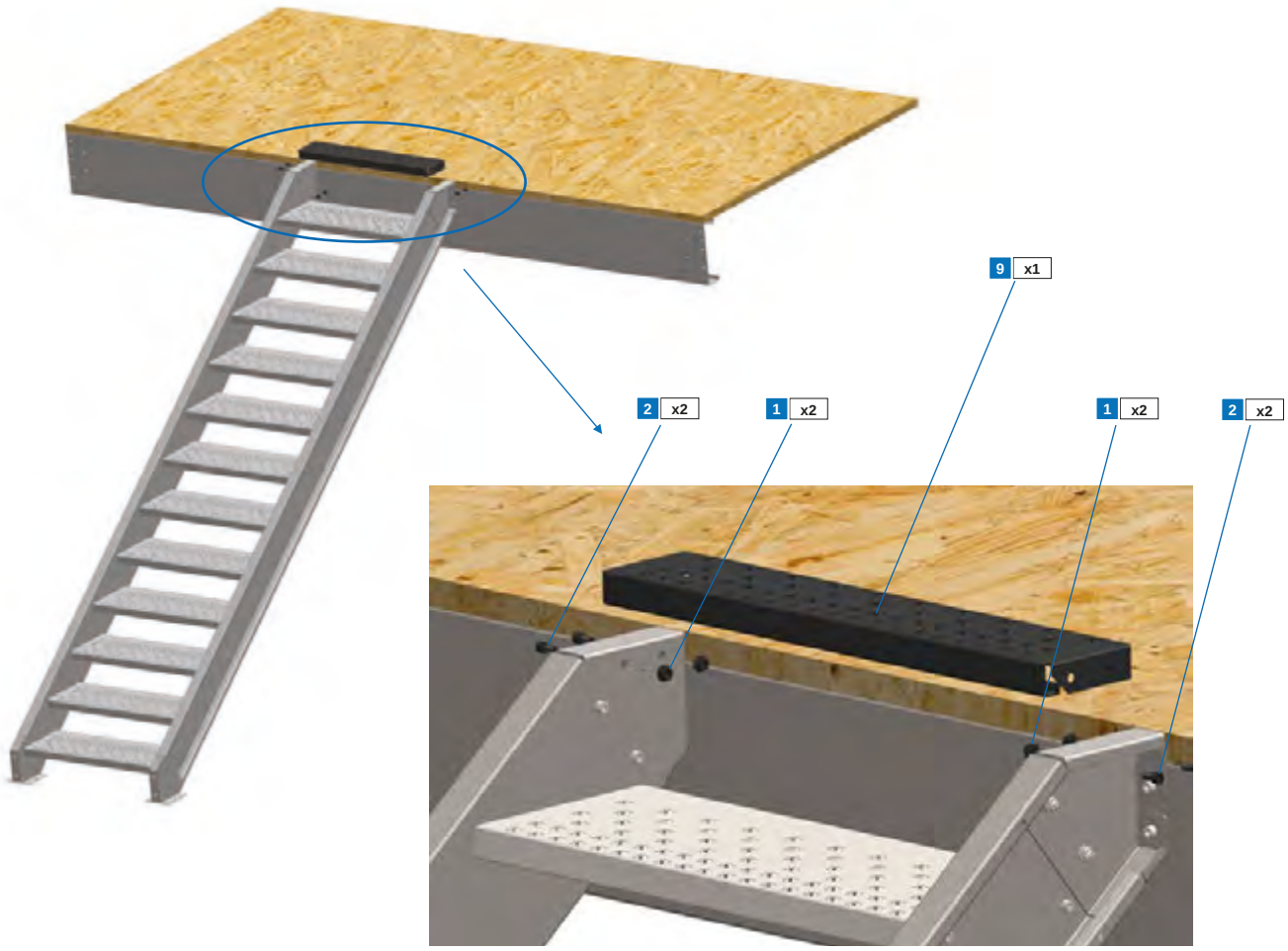

Step 5

Assembly of bottom handrail.

Step 6 Assembly of special handrail

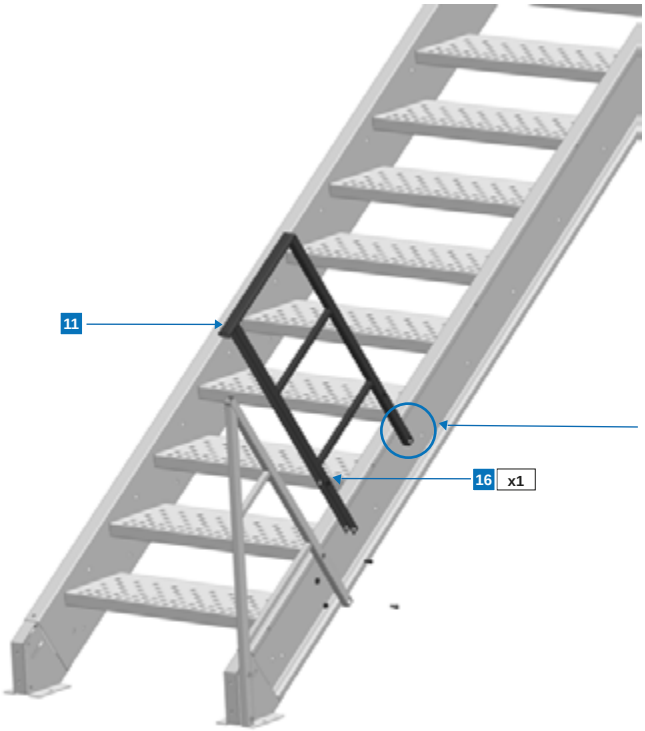

Do not fit screws here at this stage, as this may hinder installation of the next panel.

Step 7 Assembly of special half-module handrail (depending on installation)

This element (16) may or may not be present depending on the configurations.

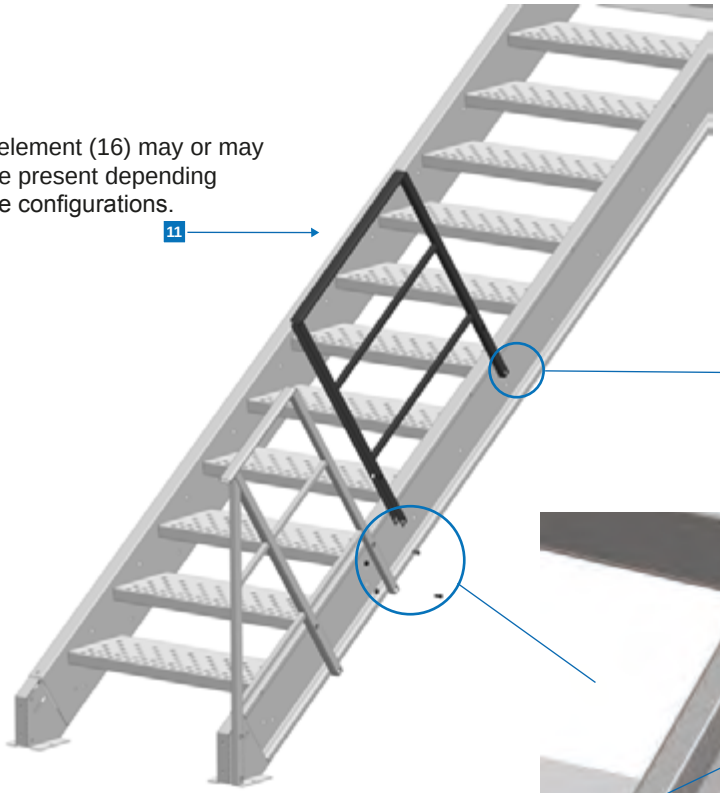

Do not fit screws here at this stage, as this may hinder installation of the next panel.

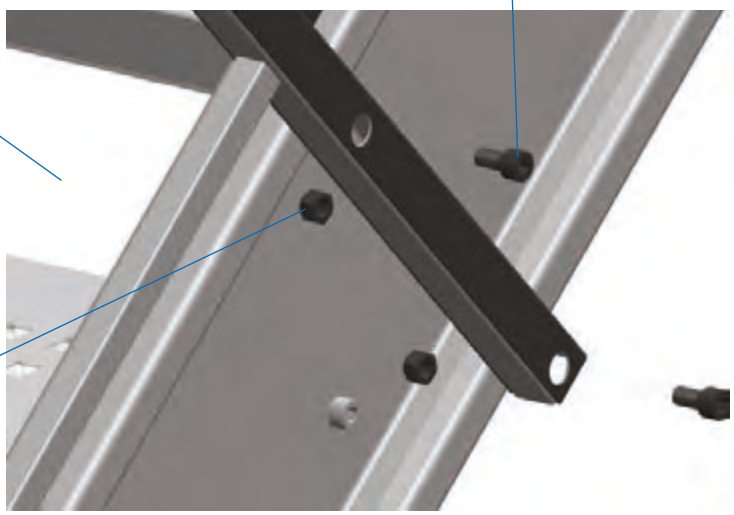

Step 8

Assembly of standard handrail.

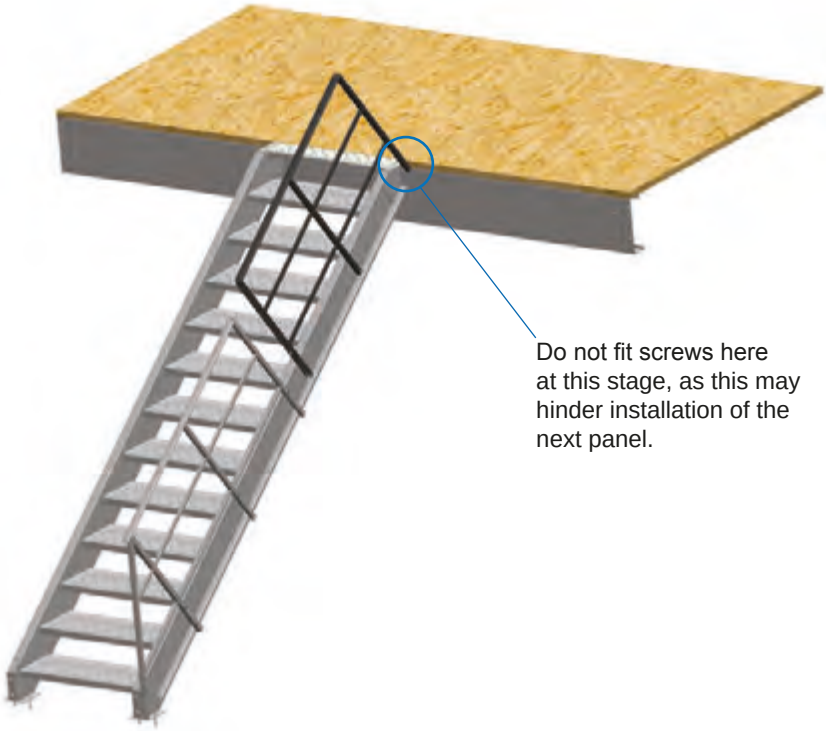

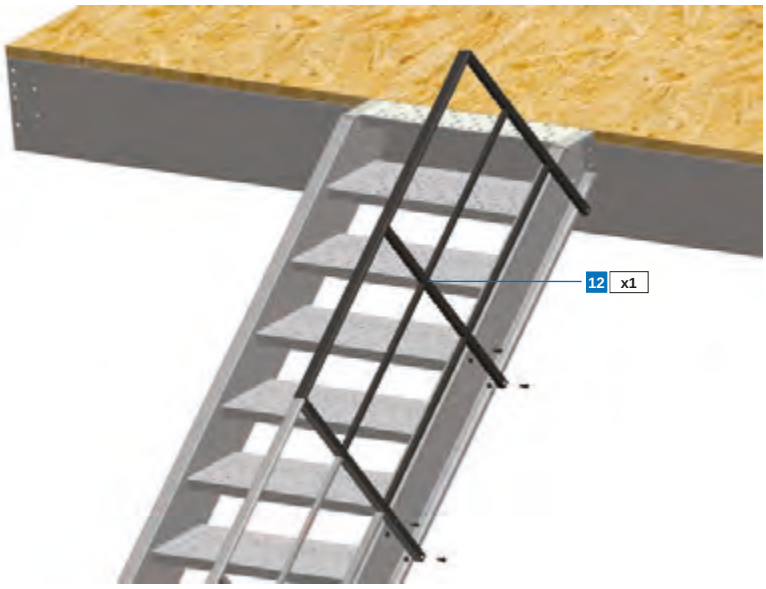

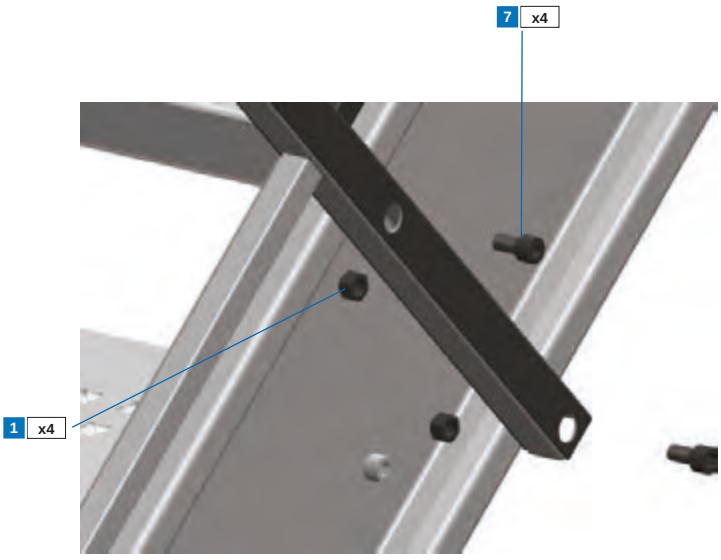

Step 9

Assembly of top handrail.

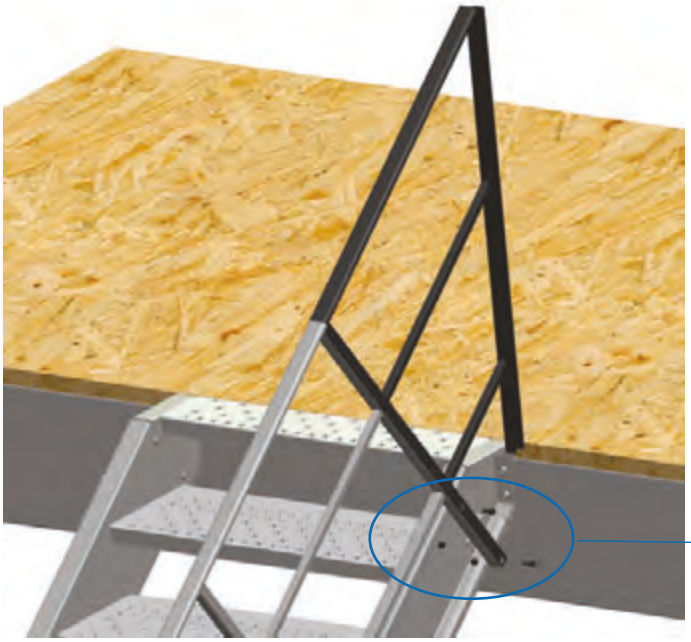

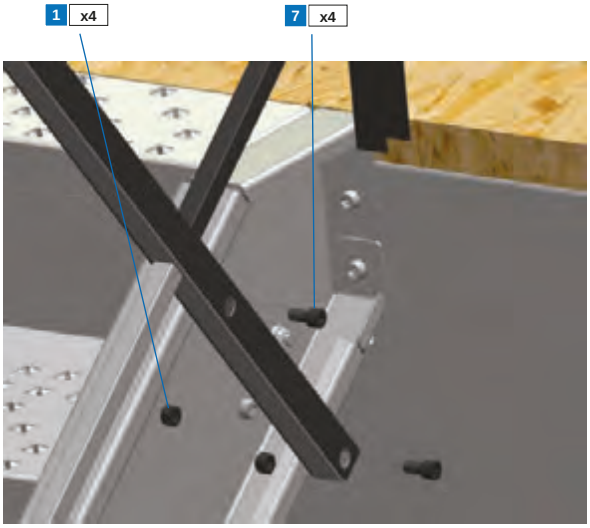

Step 10 Assembly of left handrail

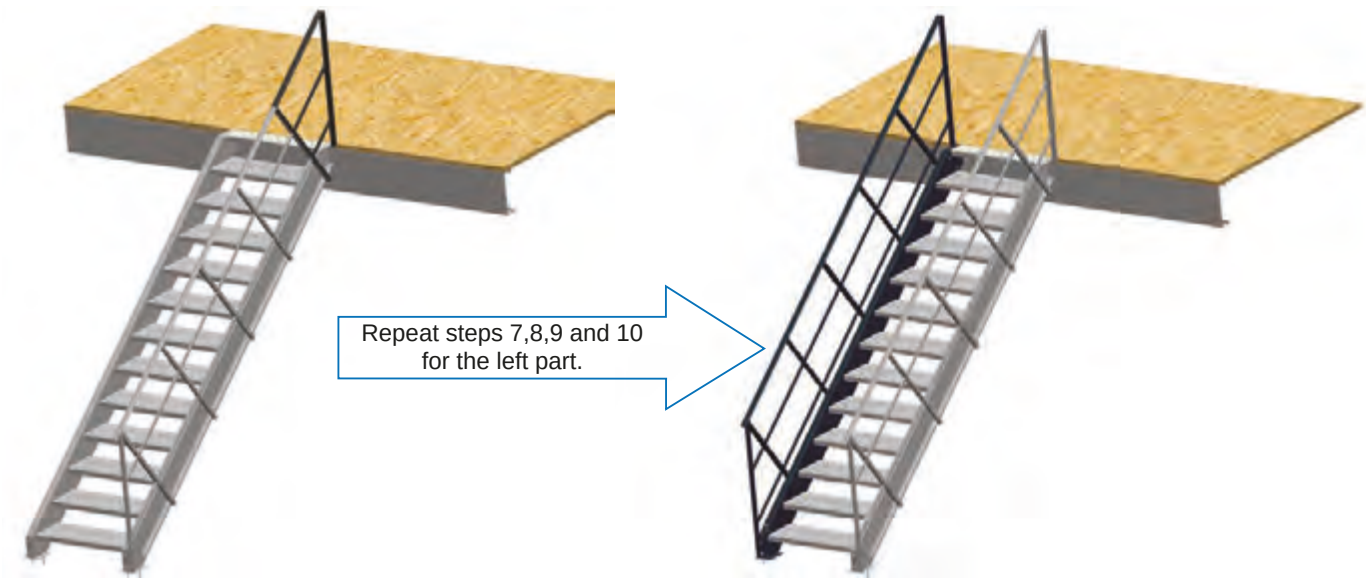

Step 11 Assembly of cut kit upright.

Fit upright 19 on the left and right.

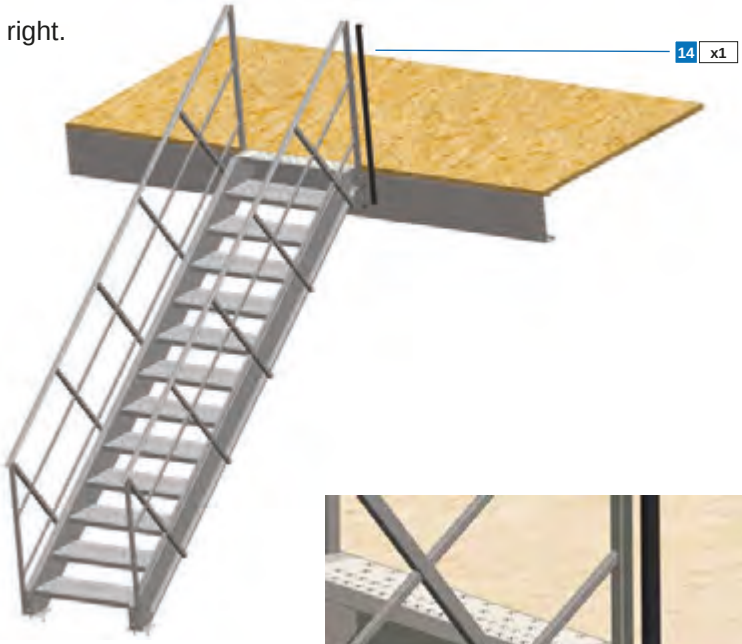

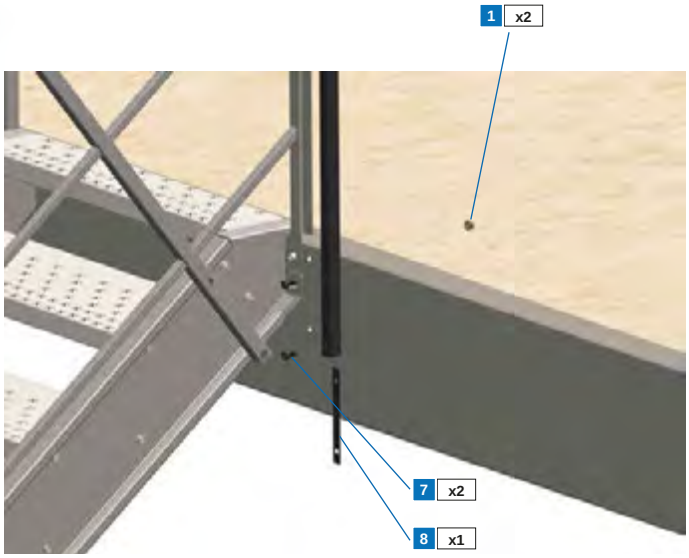

Step 12

Fixation to the floor.

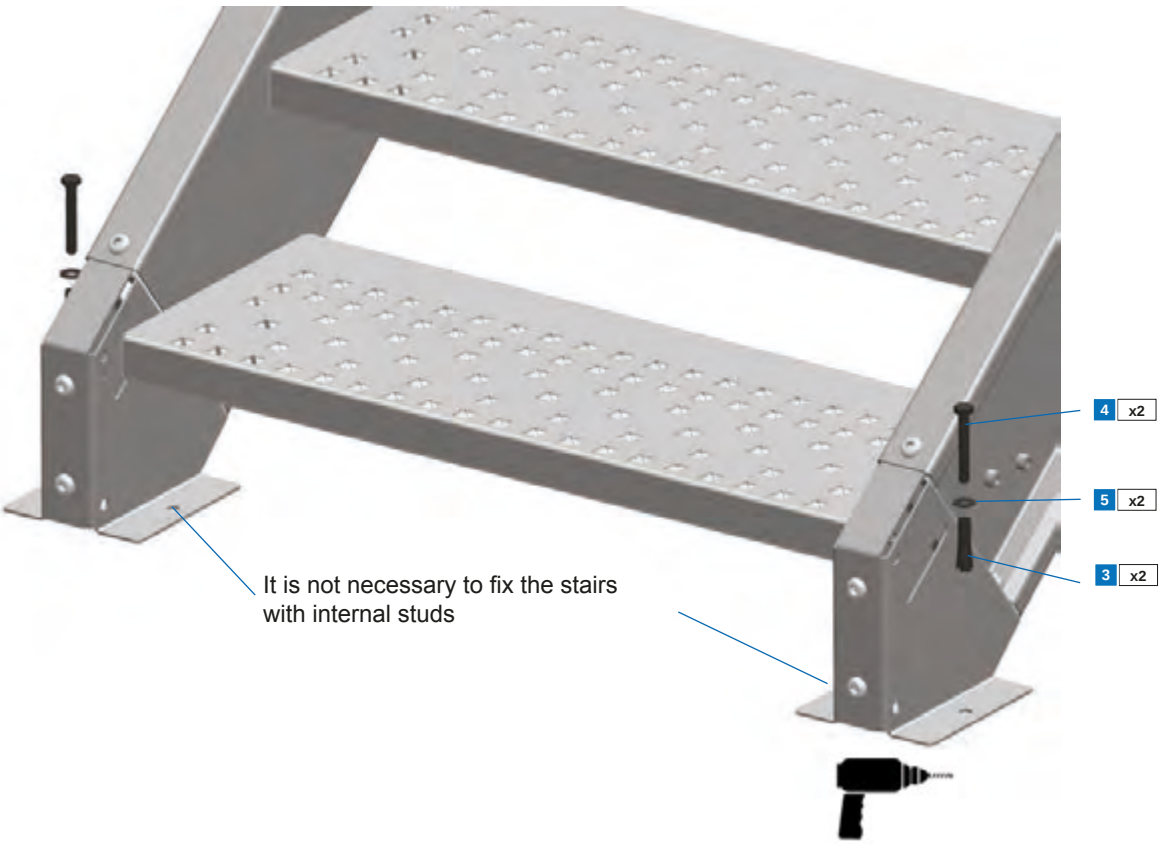

Drill bit Ø12 x 110 mm minimum

F. Instructions for assembling the railing

1. Technical specifications

a) General information

The railings are protective structures at support height built along the edges of the storage and walkway areas of industrial

installations and are designed to offer protection against the risk of people or objects accidentally falling over the edge. These products conform to the standards EN ISO 14122 and NF E 85-015.
The industrial railing must not be used as a backstop for storage areas. It should be fitted along walk areas accessible to staff.

The figure below shows the different components that constitute a railing.

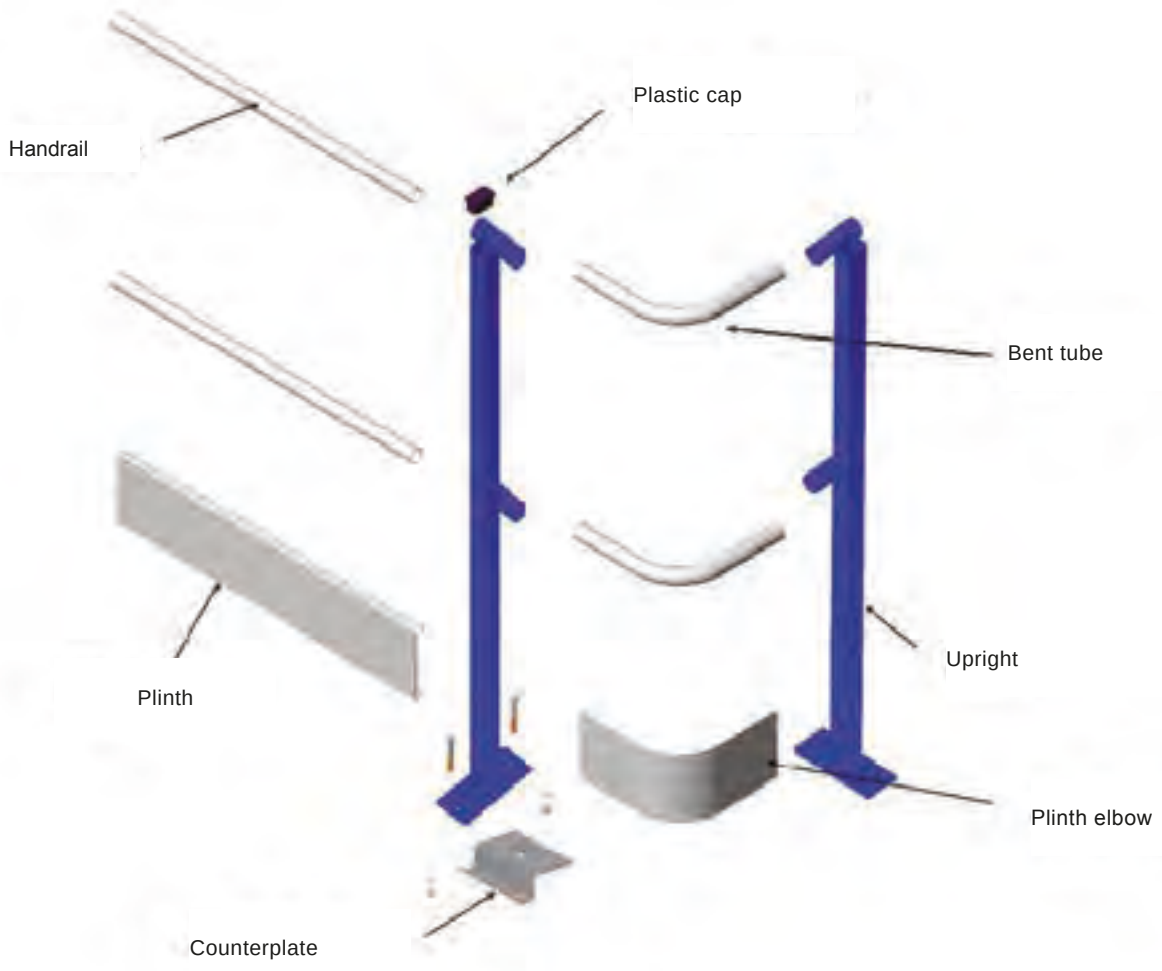

Railing

b) The uprights

A railing upright comprises a 50x30x1x5 profile, a footplate of 160x60mm, 6mm thick, welded to one end of the tube and containing two perforations of 10.5mm diameter for fixation to the flooring of the PF04 mezzanine.
Along the upright, there are two welded tubes of 35mm diameter, 1.5mm thick and 100mm long.

c) The handrails

The handrails are made from tubes of 30mm diameter, 1.2mm thick.
The handrails are fixed to the uprights using self-tapping screws of 4.2mm diameter and 19mm length.

d) The plinths

The railing plinths are made from C-profiles measuring 150x20x10 and 1mm thick.
They are fixed to the uprights using self-tapping screws of 4.2mm diameter and 19mm length.

e) The counterplate

The counterplate is an important component of the railing. It is shaped from sheet metal 3mm thick. The counterplate is located beneath the flooring and is attached to a beam inside the mezzanine.

2. Principles of assembly for the handrail

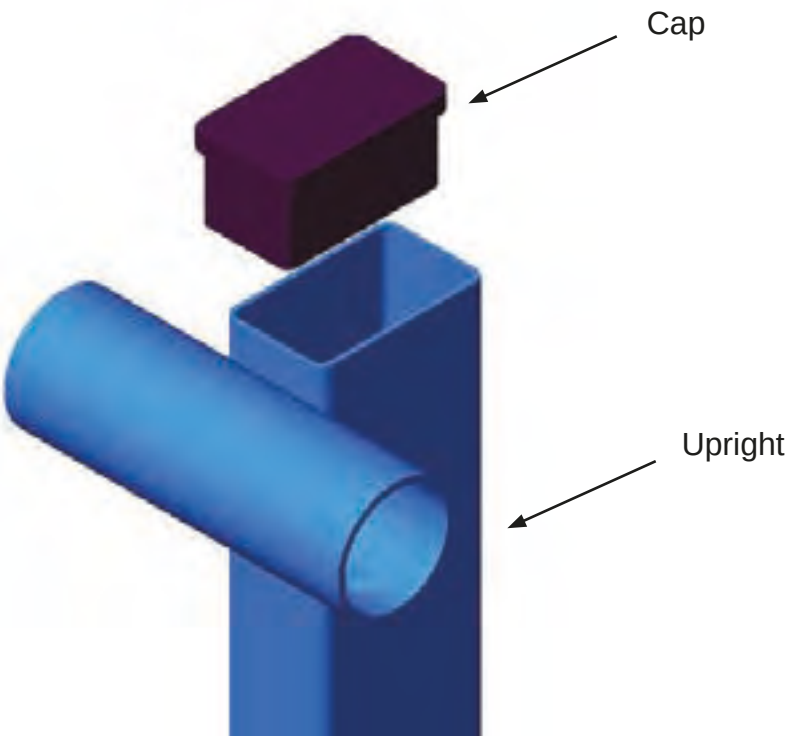

Step 1

- Fix the uprights onto the flooring using 2 screws M10, 70mm long, class 8.8, and 2 nuts M10 Nylstop, 2x2 washers and the counterplate.

The counterplate is installed on the beam return then clamped between the chipboard and the washer inside the mezzanine.

The figure on the left shows a side view, and the view on the right is a view from below.

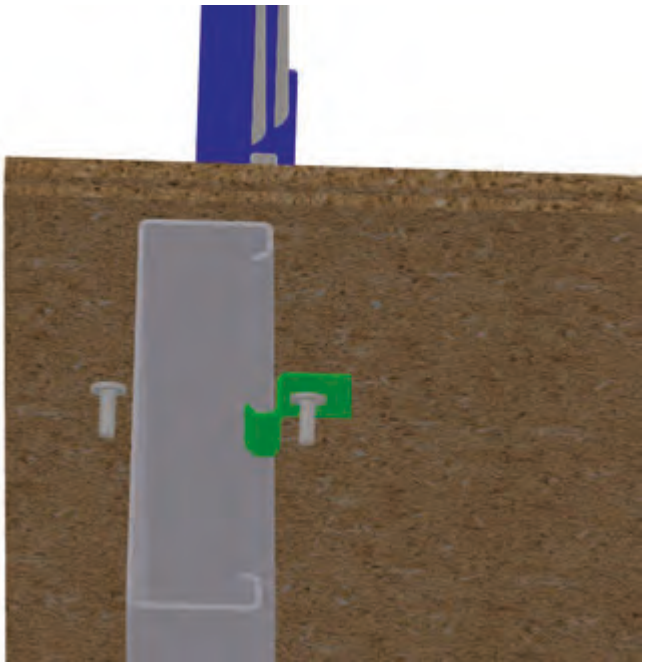

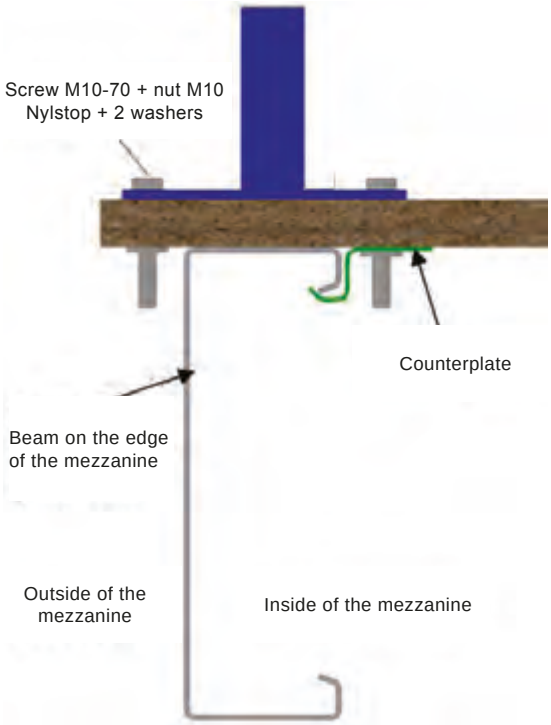

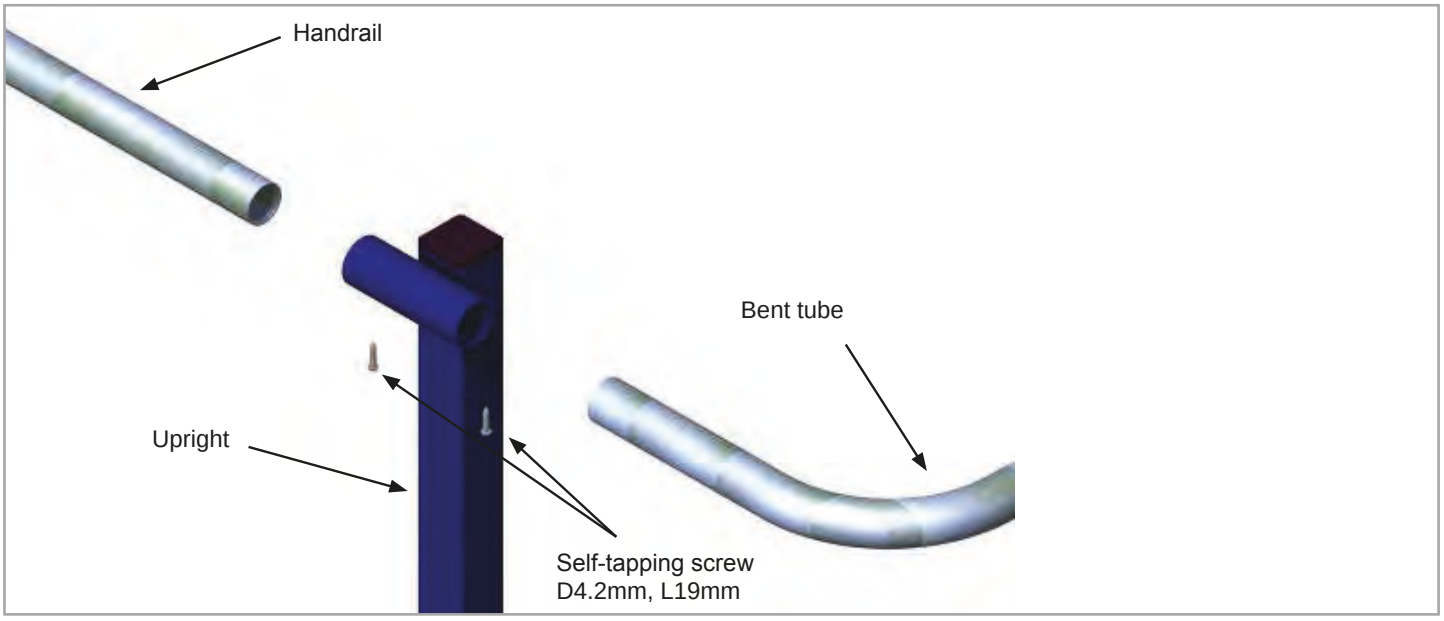

Step 2

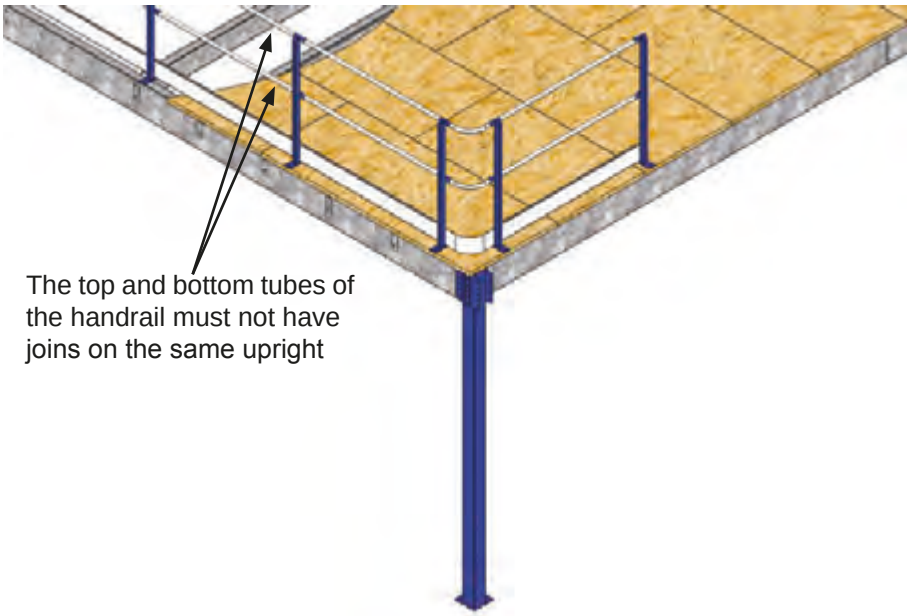

- Position the handrails and fix them in place using the self-tapping screws (D4.2mm, L19mm) provided

Step 3

- Position the plinths and fix them in place using the self-tapping screws (D4.2mm, L19mm) provided

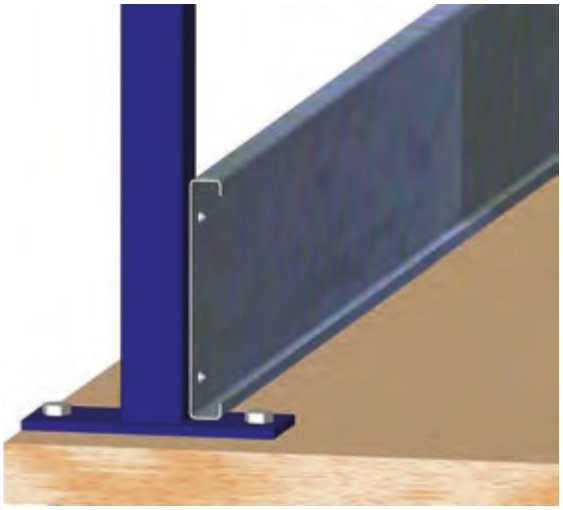

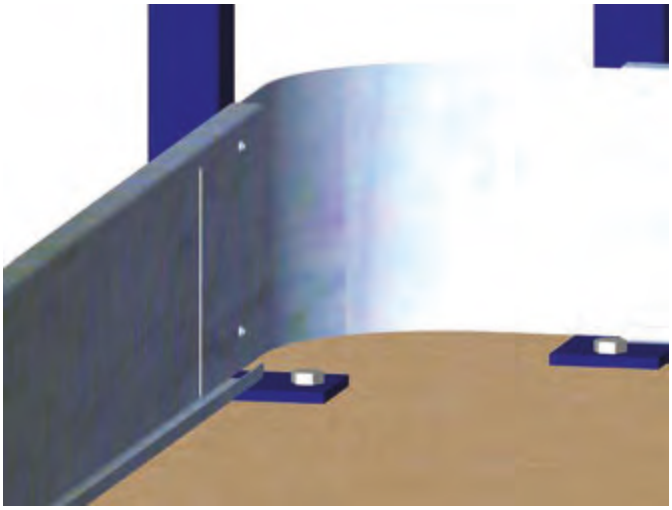

3. Conditions of assembly

a) Assembly tolerances

The gap between two adjacent uprights must be less than or equal to 1500mm in accordance with the standards EN ISO 14122 and NF E 85-015.
The open space between two segments of railings (railings interrupted, junction with stairs, etc.) must be between 75mm and 120mm in accordance with the standards EN ISO 14122 and NF E 85-015.

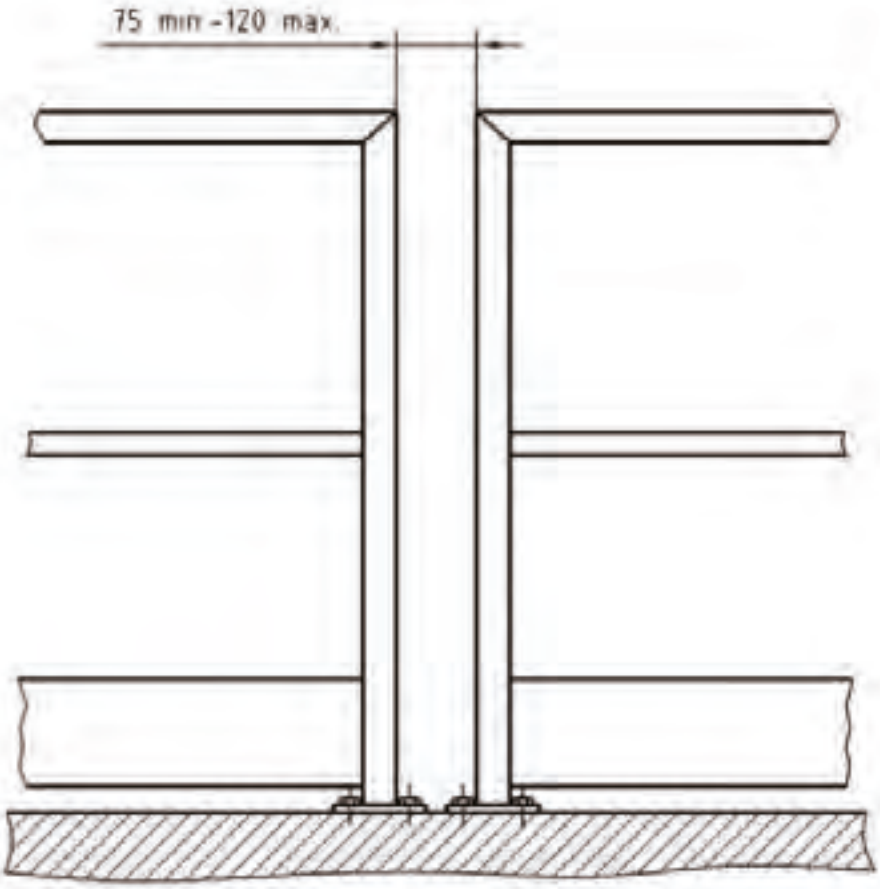

Minimum space between two railing elements

b) Quality of flooring

The railing uprights must be mounted on flooring made from 30mm or 38mm chipboard panels laid out in a «brick wall» arrangement. The average densities of the chipboard panels that must be used are as follows: 640 kg/m3 for 30mm chipboard and 720 kg/m3 for 38mm chipboard.

Each footplate for the handrail uprights is fixed to the flooring using two screws M10-70, class 8.8. On the outside of the mezzanine, the upright is fixed using a screw, a washer and a nut underneath the flooring. On the inside of the mezzanine, the upright is fixed using a screw, the counterplate, a washer and a nut underneath the flooring.

The flooring onto which the handrail will be fixed must not have any holes or significant elevations/drops that could impair sturdy fixation of the handrail. In addition, it must be attached to the steel structure in accordance with the recommendations described in the assembly instructions for the mezzanines.

a) Safety regulations

Assembling this type of equipment requires competent staff who observe the health and safety rules in force.

4. Maintenance and guarantee

a) Maintenance of the handrail

The handrail may be washed with any detergent that does not damage EPOXY paintwork (in this case, avoid detergents containing chlorine).
Users are required to check the tightness of the bolts on the uprights at least once a year.

b) Modifications to the railings

Any modification of the railings compared with the plans created during the design stage requires consultation with the company MANORGA.

Similarly, any replacement of any element of the railing also requires consultation with the company MANORGA.
Also, in case of impact, if the structure develops any significant cracks or deformations, use of the handrail must cease.

In this case, the owner and/or the user of the handrail must enlist, at its own expense, competent bodies to verify the effects of any such impacts/cracks/deformations on the mechanical strength of the railing.
Defective parts must be replaced.

5. Characteristics and assembly principle of handrail

1

Cut kit

5

Edge trim

2

Counter plate
for cut kit

6

Slotted flange
nut M10

3

Corner handrail

7

Self-tapping
hex-head
screw with flat
base 4.2x19

8

Self-tapping
screw TCB
4.2x19

4

Platform handrail

9

Screw CHC M10 x 30

5

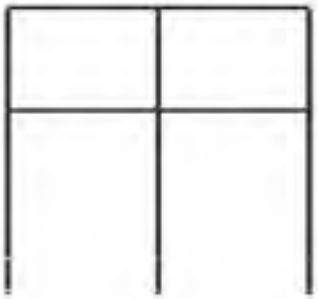

Platform handrail
to be cut

kits to be cut:
The beams are pre-drilled in the factory according to the configuration of your platform. There is no need to drill holes on-site

10

Finish plinth

Step 1

Assembly of corner panel

Note the positioning of your optional equipment: stairs, safety gate, gate, etc.

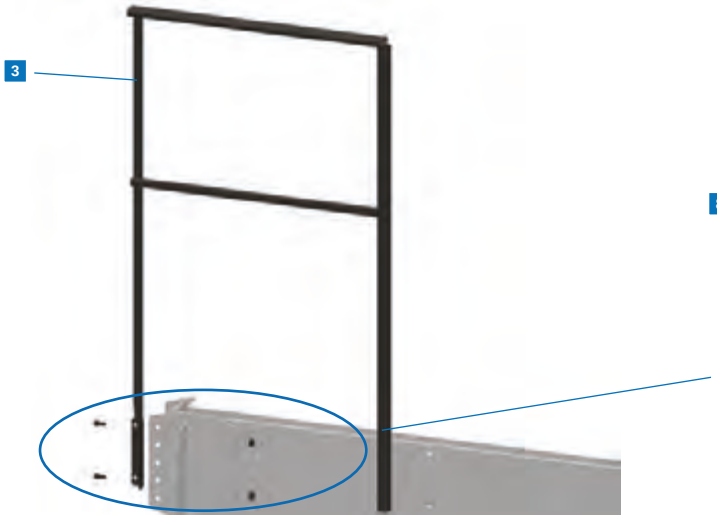

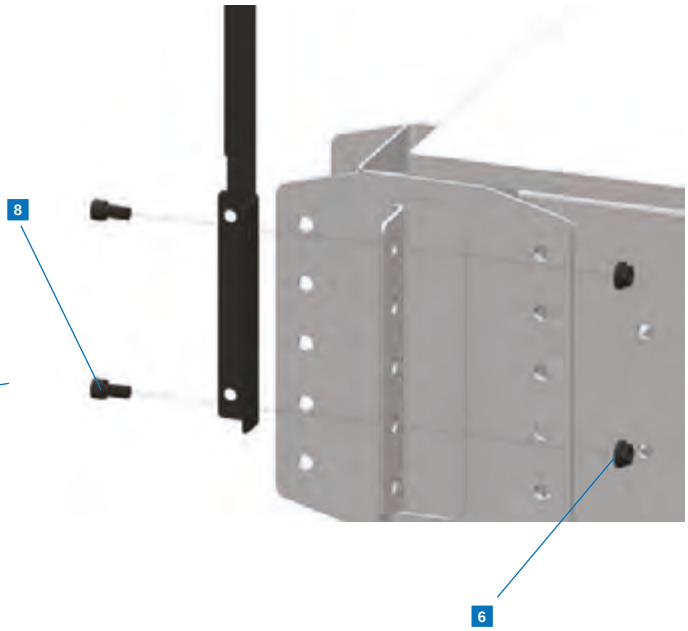

Assembly of panels

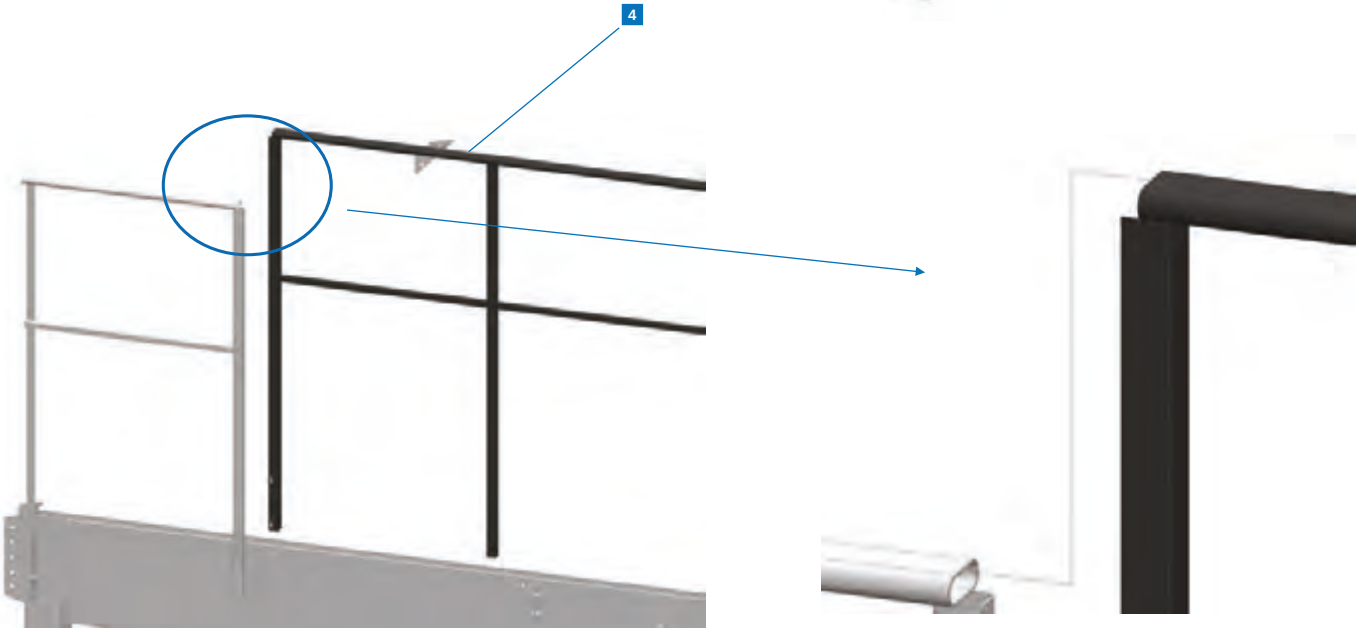

Assembly of panels

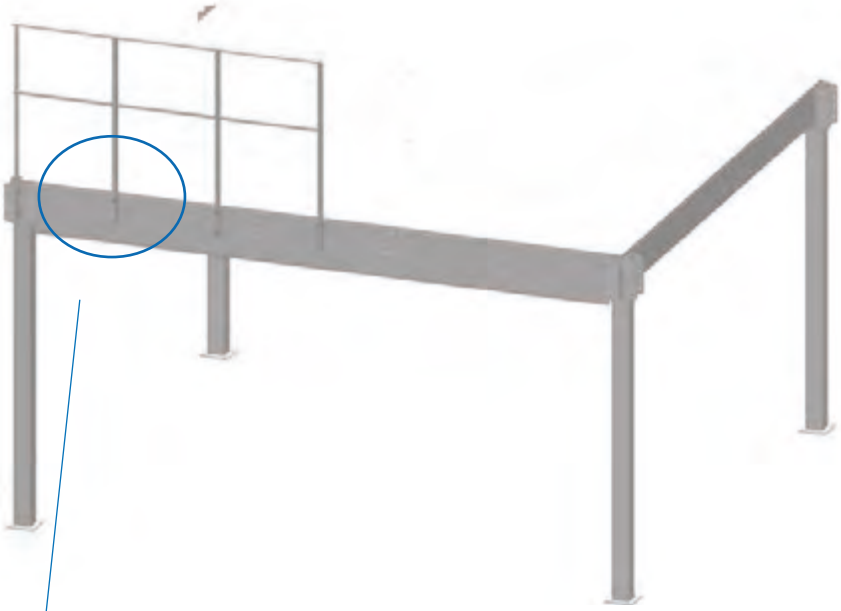

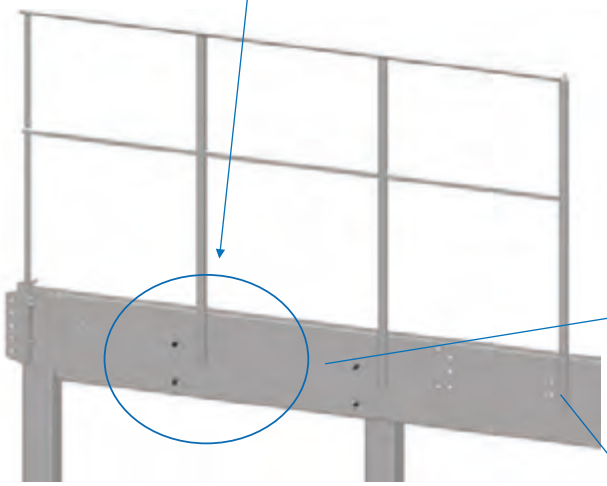

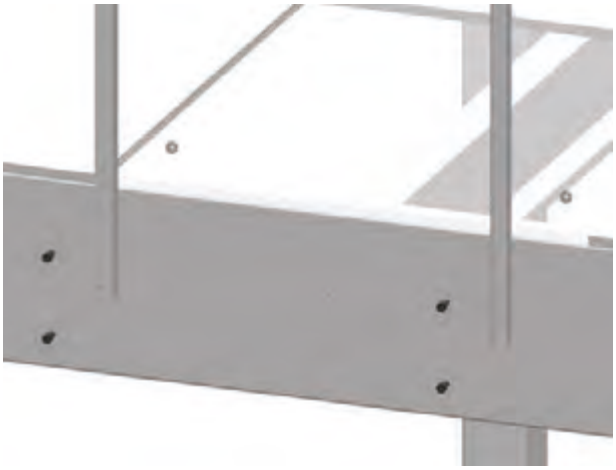

Do not fit screws here at this stage, as this may hinder installation of the next panel.

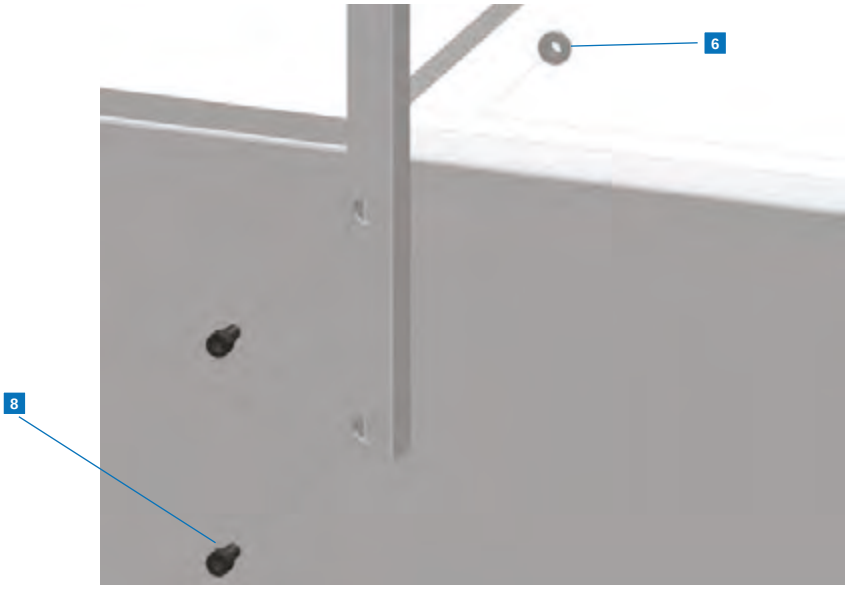

Step 4

Assembly of next corner panel

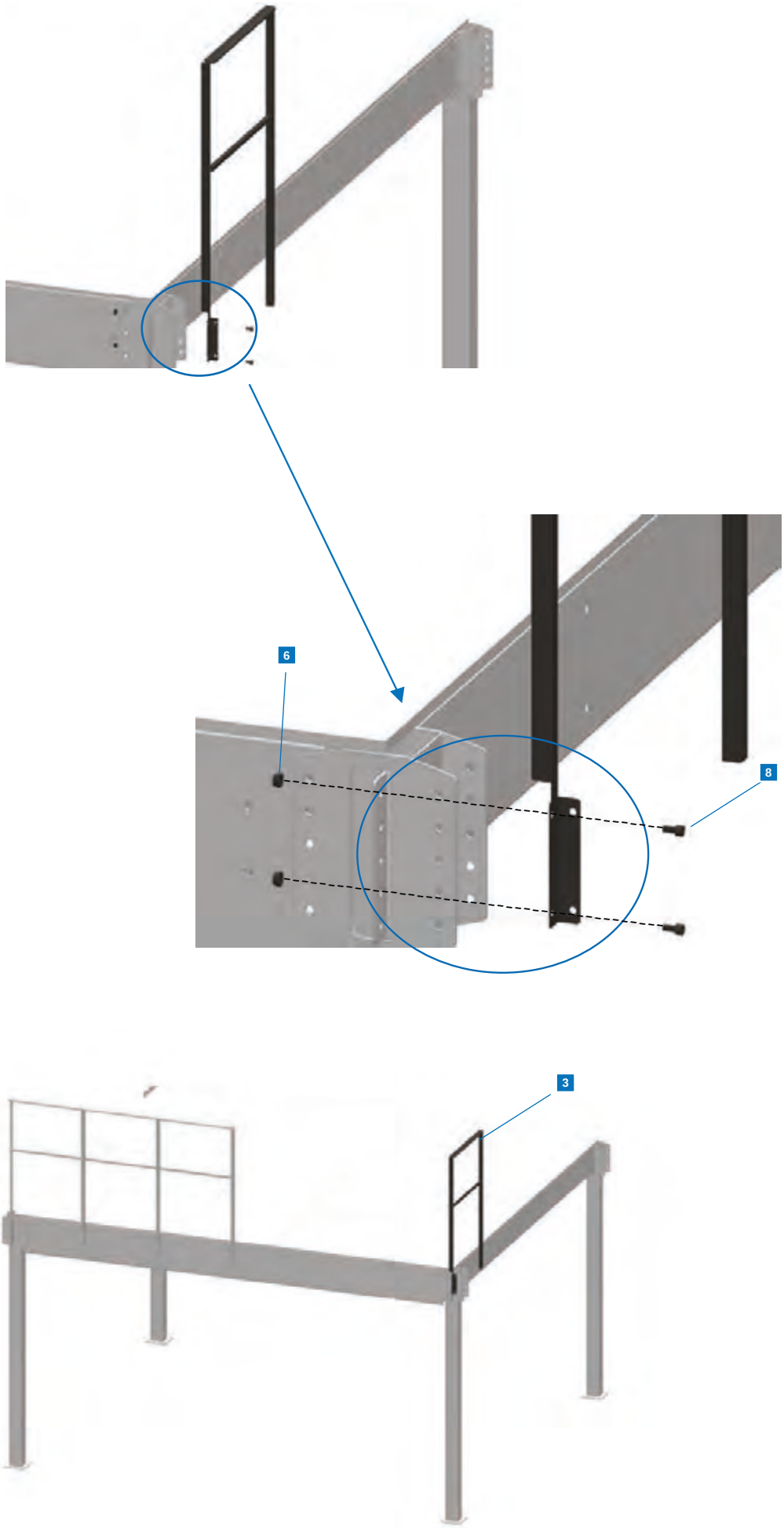

Step 5

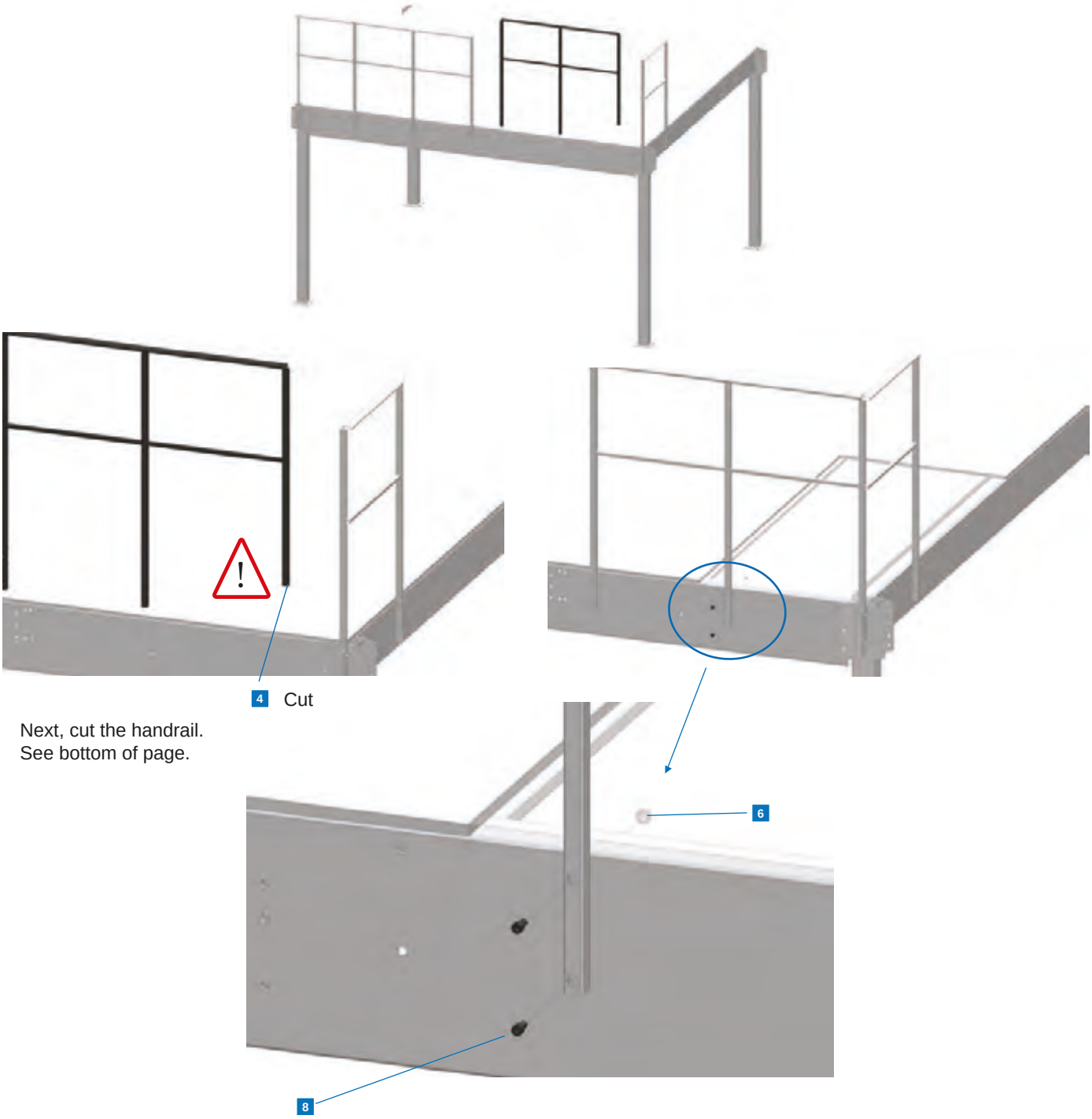

Next, cut the handrail.
See bottom of page.

Cut of corner panel

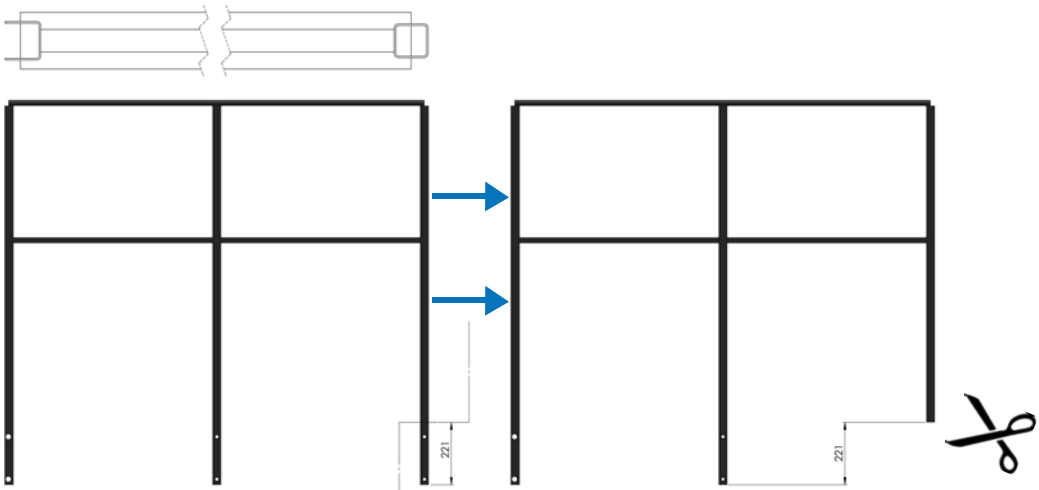

Step 6

Assembly of platform cut kit upright

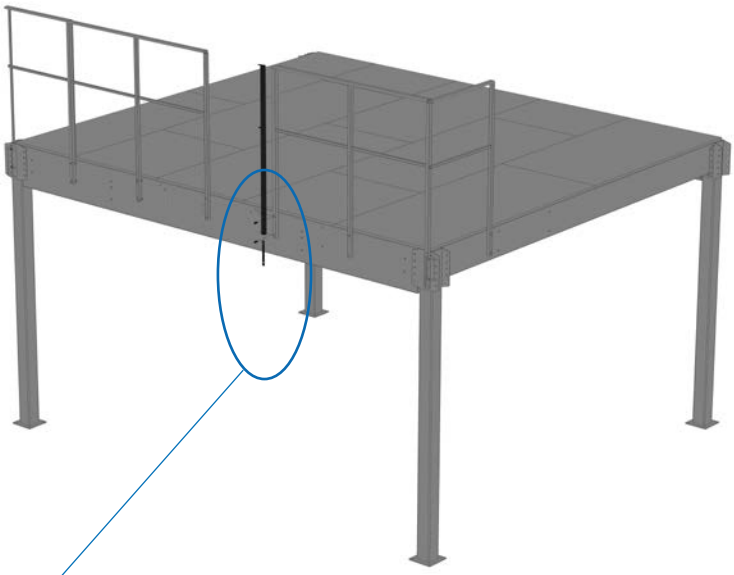

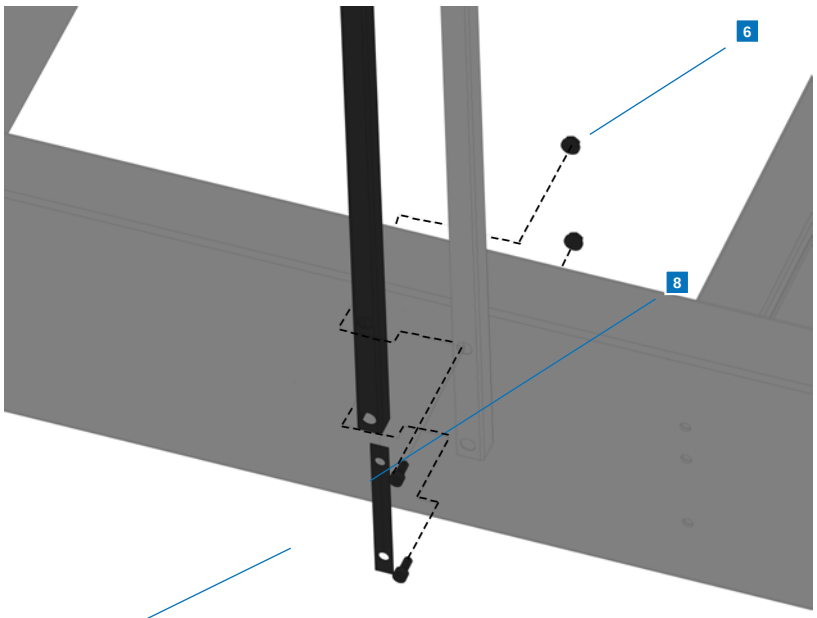

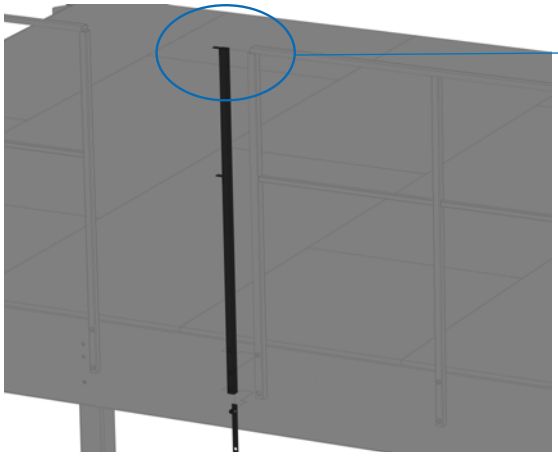

Step 7

For cutting, see bottom of page.

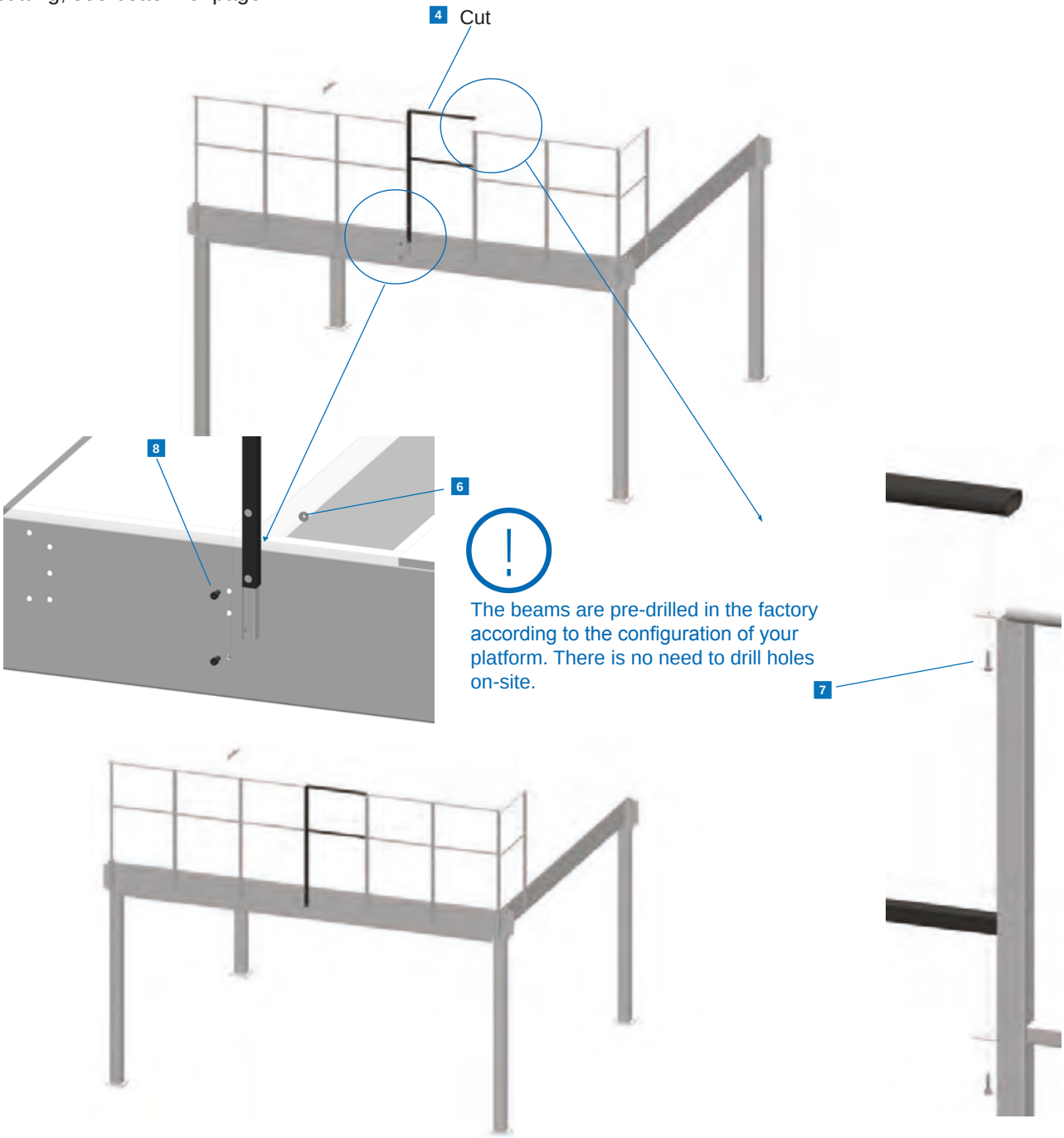

The beams are pre-drilled in the factory according to the configuration of your platform. There is no need to drill holes on-site.

Kit coupe

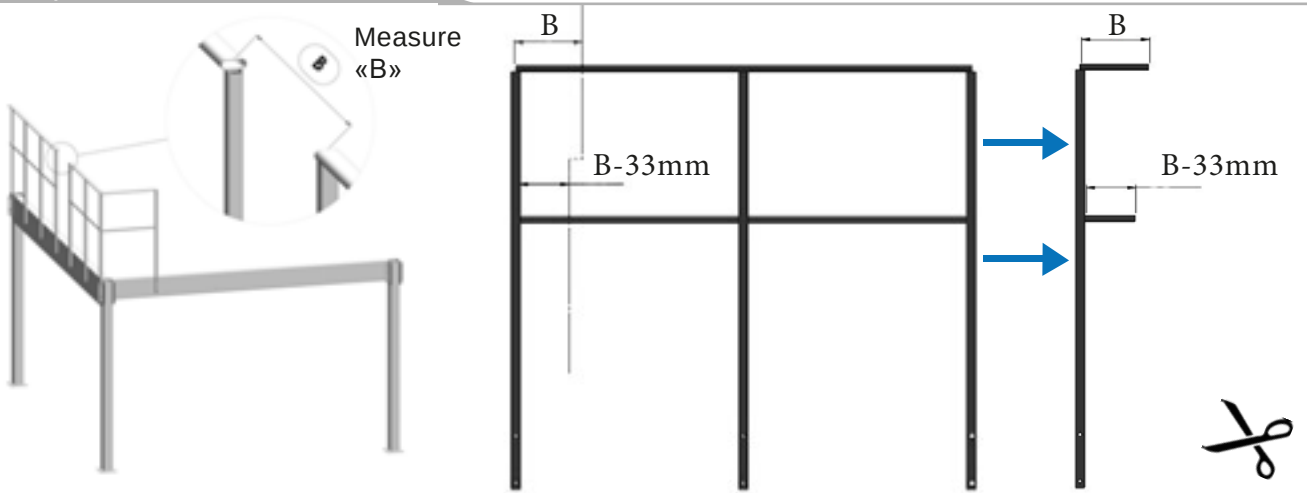

Step 8

Dimensions of platform handrail to be cut 5

Once the platform handrails have been assembled, cut the handrail 5 to the dimensions indicated below:

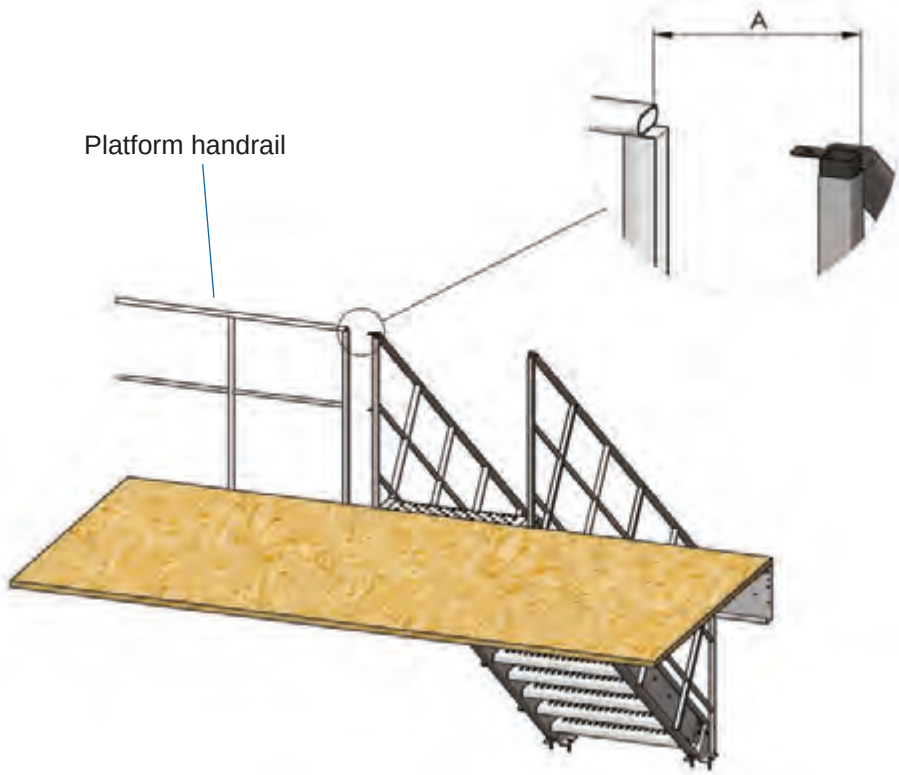

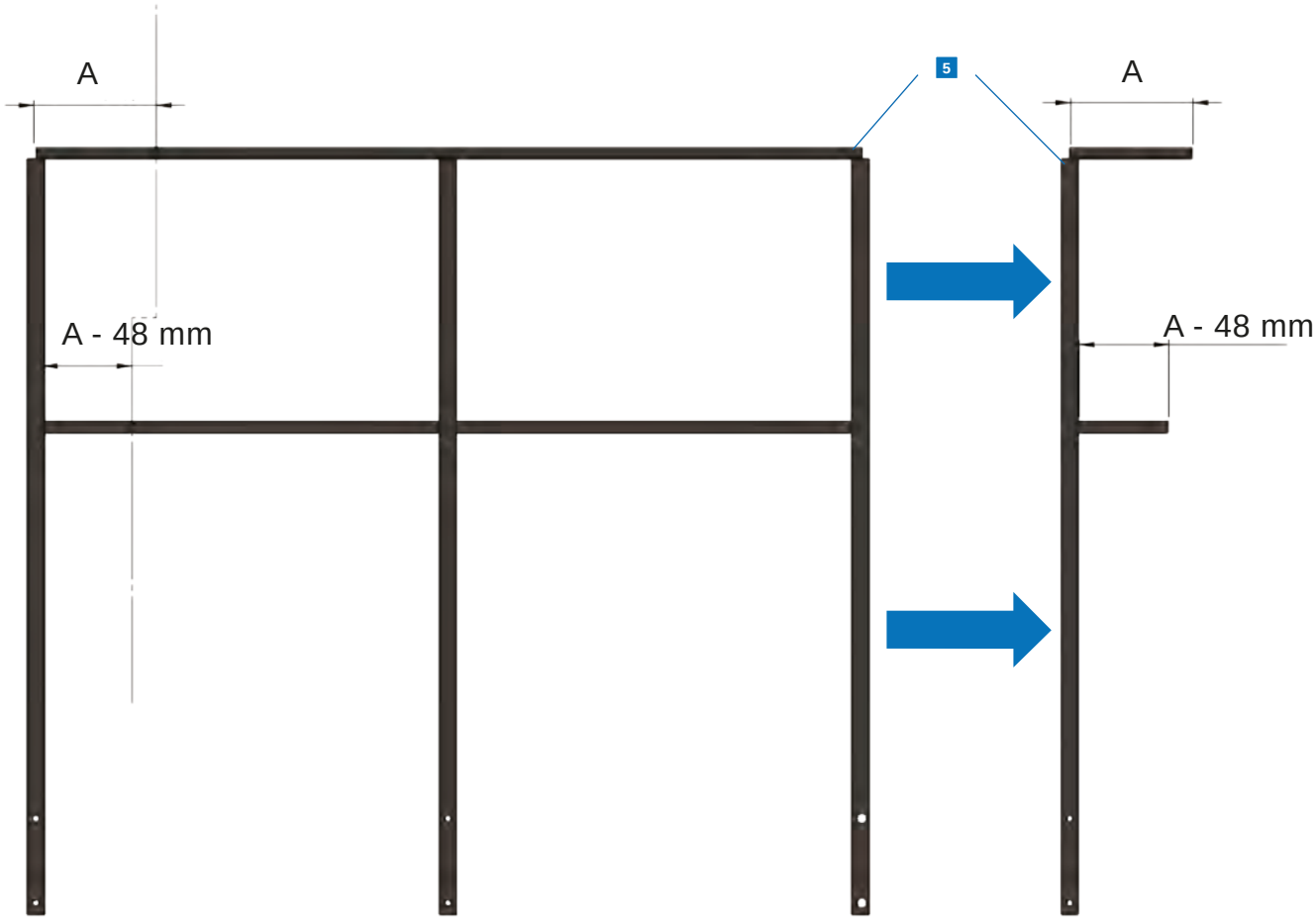

Step 9

Assembly of platform handrail to be cut

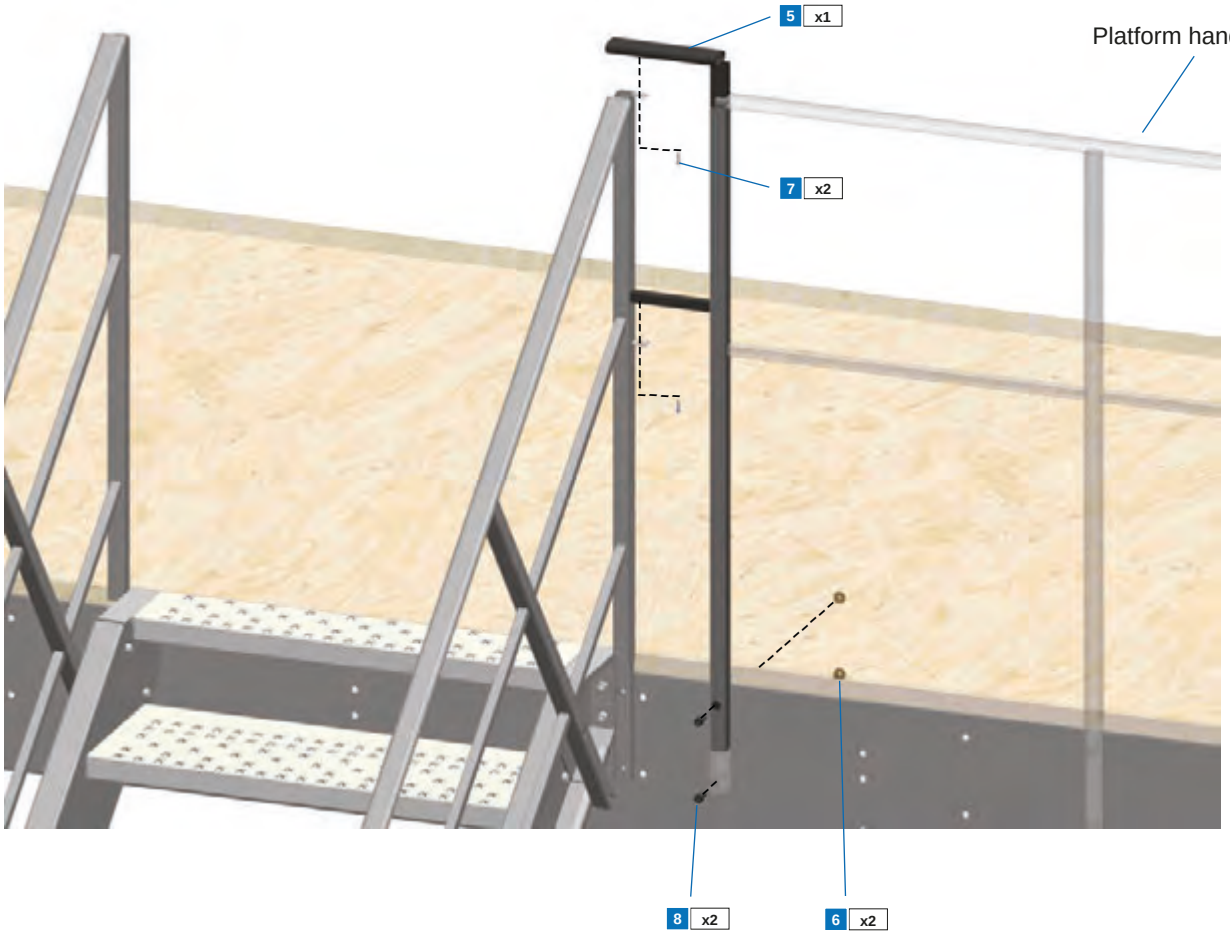

Repeat steps 12,13 and 14 for the left part.

Step 10 Assembly of edge trim

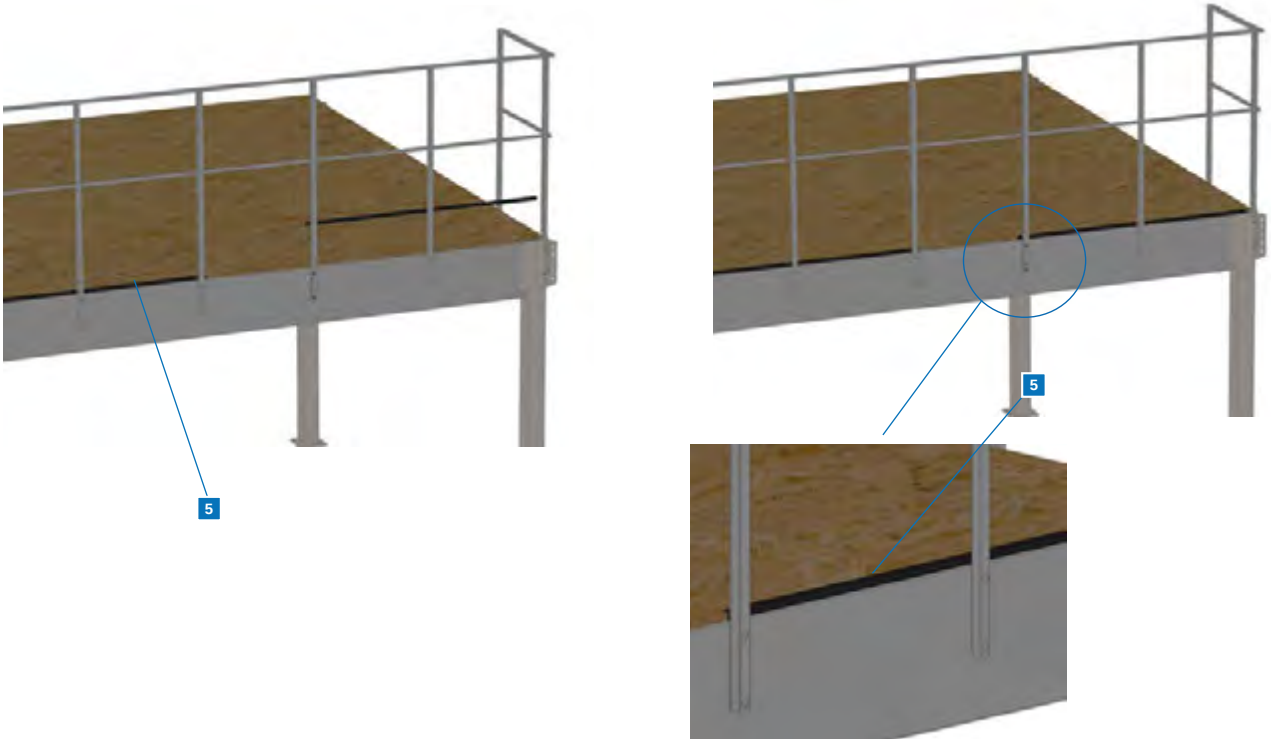

Etape 11 Assembly of finish plinths

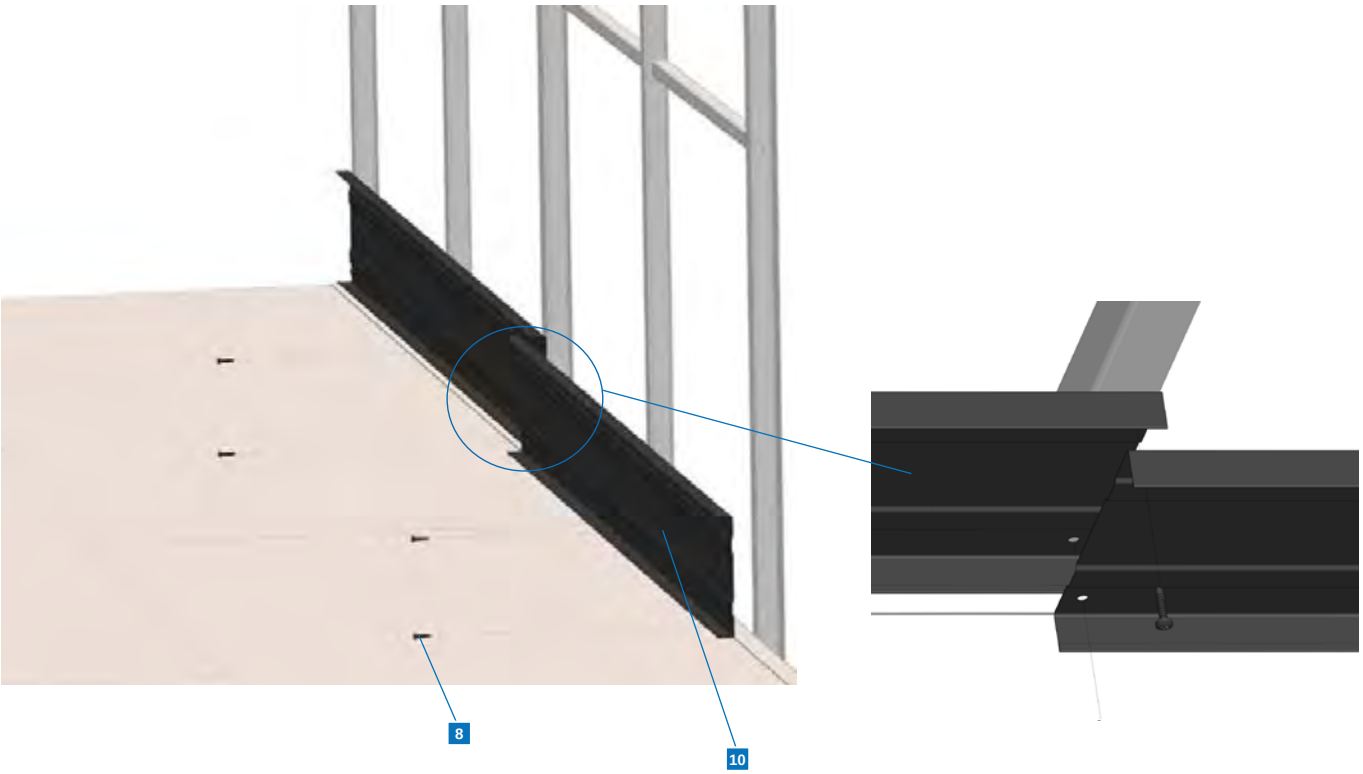

G. Instructions for assembling the safety gate

1. Assembling instructions

The assembling has to be done by a skilled and enabled person to this kind of work. The safety gate has to be fixed on a chipboard floor :

- of a single layer of 38 mm and a density of 720 kg per cubic meter redolent of « structural wall brickwork »
- of a double layer of 22 mm and a density of 610 kg per cubic meter redolent of « structural wall brickwork »

The floor has to be correctly fixed to the mezzanine structure regarding our instrustions mentioned on the assembling and maintenance instruction for the « OMEGA PF04 mezzanine ».
Each floor plate has to be fixed with screws H M 10x70, nuts M10 and counter-wedges.

DIMENSIONS

DIMENSION INDEX		
mm	Model 18/15	Model 18/23
A	2225 mm	2225 mm
B	1825 mm	1825 mm
C	2250 mm	2250 mm
D	2375 mm	2375 mm
E	480 mm	480 mm
F	1890 mm	1890 mm
G	1800 mm	2600 mm
H	2155 mm	2155 mm
I	1540 mm	2340 mm
J	250/150 (2)	250/150 (2)
Dimension max. load L x H x P	1500x1800x1400 mm	2300x1800x1400 mm
Dimension max. load (2) L x H x P	1500x1600x1600 mm	2300x1600x1600 mm
Handling effort	<20 daN	20 daN
Weight	105 kg	115 kg

Dimension of the closed safety gate

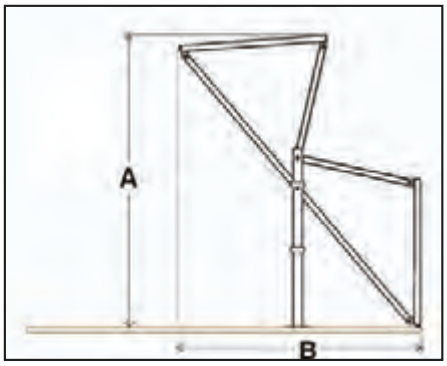

Maximum height at steerage

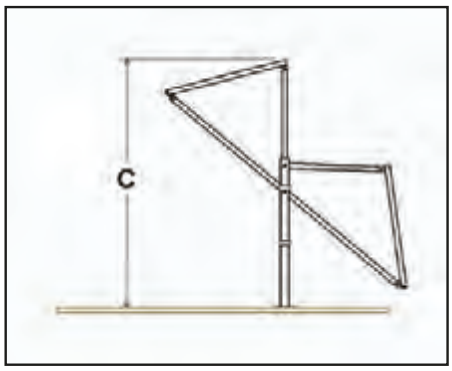

Maximum size at steerage

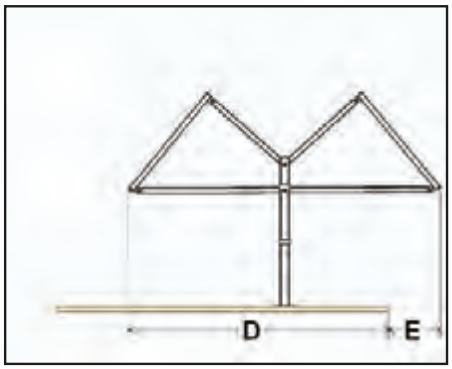

Dimension of the opened safety gate

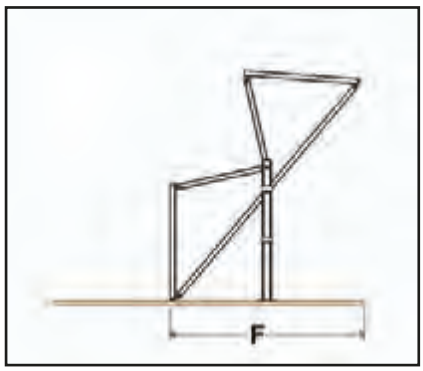

Total length

Free place

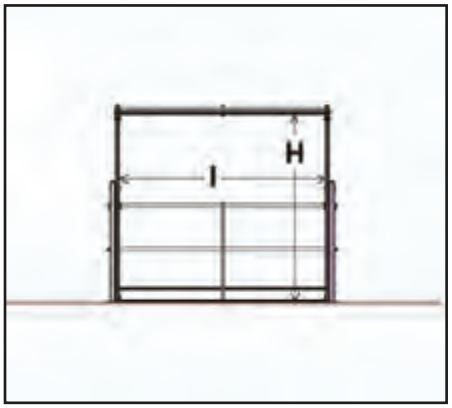

Load capacity

2. Methods of installation and assembly

a) Necessary tools for the assembly

rubber mallet

Pawl key

Socket 19 and 17

Spanner 19 and 17

Drill

b) Components

Safety gate

1 Mobile panel L.1600 or 2400 mm (x2)
2 Beams L.2670 mm (x2)
3 Arm L.910 mm (x4)
4 Ground L.1350 mm (x2)
5 Counter wedge (x2)
6 Perforated Plastic foot 50 x 30 mm (x6)
7 Plastic foot 50 x 30 mm (x8)
8 Rubber stop (x6)
9 Composite bearing block diam.12 mm (x32)
10 Composite bearing block diam.16 mm (x32)
11 Grinded axis d.12/M10 (x8)
12 Grinded axis d.16/M12 (x4)
13 Brake nut M10 (x16)
14 Brake nut M12 (x4)
15 Washer M12 (x4)
16 Plastic cap 80 x 60 mm (x2)
17 Handrail connection (x4)
18 Chipboard screw diam.5 x 40 mm (x4)
19 Screw H M 10 x 70 mm (x8)
(floor fixing))

Side protection

20 Side protection (X ordered quantity)
21 Self drilling screw (4 per side protection)
Ø 4.2 x 19 mm

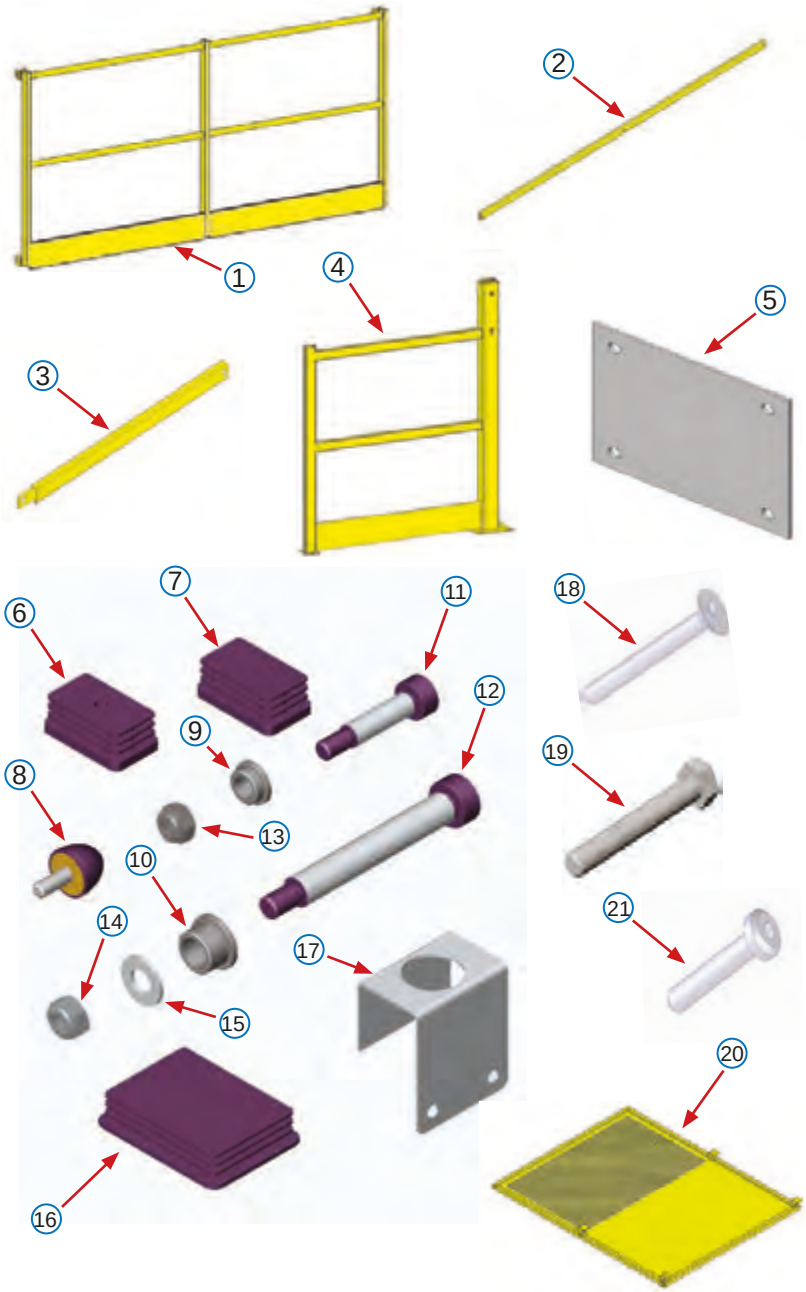

c) Assembling

Assembling of the beams

Step 13.1

- Insert the composite bearing blocks -Nb 9- in the extremity perforations of the beams -Nb 2- and the arms -Nb 3-using a rubber hammer.
- Use the grinded axis -Nb 11- as a chuck to insert : . the bearing blocks d.12 - Nb 9- in the arms -Nb 3- and the extremities of the beams -Nb 2- .
- The bearing blocks d.16 -Nb 10 – in the flat part of the arms -Nb 3- and in the central perforations of the beams -Nb 2- and in the grounds -Nb 4- (check the sens of the bearing blocks on fig. 4 and 5).

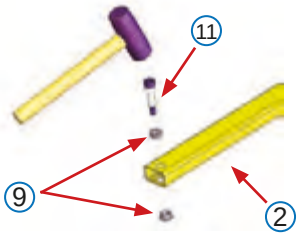

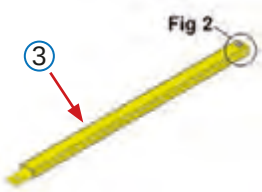

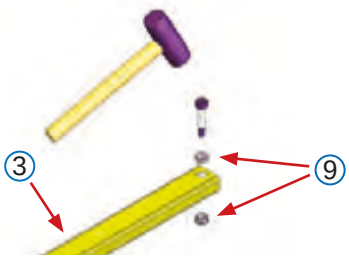

Step 13.2

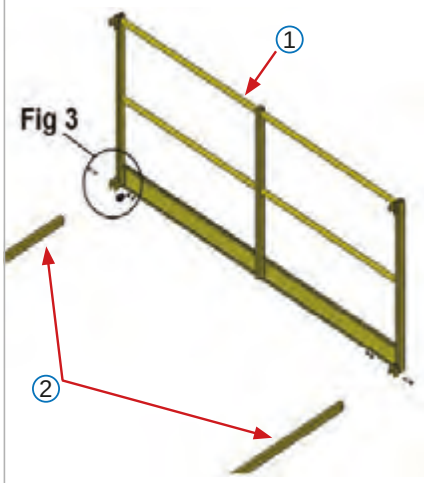

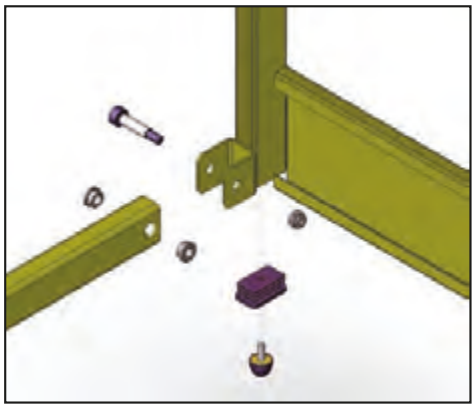

Screw the rubber stops -Nb 8- in the perforated plastic foot -Nb 6- and fix them in the panel tubes - Nb 1- Insert the plastic caps 50 x 30 -Nb 7- on the top of the panel tubes -Nb 1- Fix the beams.

-Nb 2- on the firts panel -Nb 1- respecting the order and the direction of the elements. Insert the plastic caps 50 x 30 -Nb 7- and 80 x 60 -Nb 16- on the top of the ground tubes -Nb 4- Fix the beams -Nb 2- on the uprights -Nb 4- with the axis d.16 -Nb 12- then the arms -Nb 13- of the first panel -Nb 1- (see drawings 4 and 5).

Composite bearing block and axis diam. 16 mm -Nb 10 and 12-

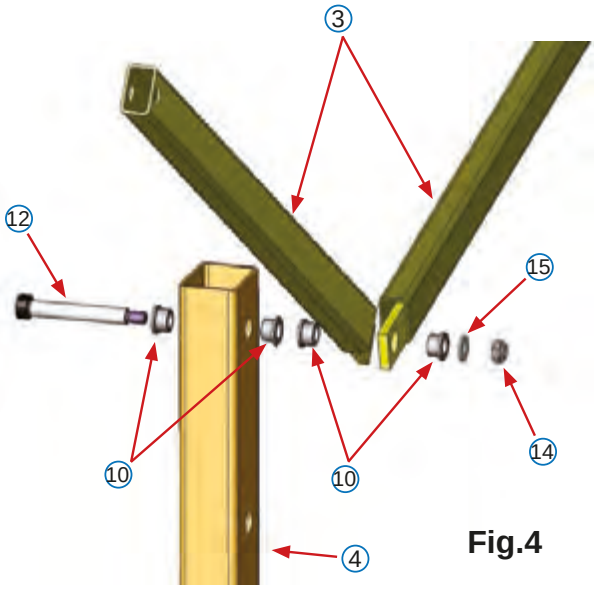

Fig.4

Composite bearing block and axis diam. 12 mm -Nb 9 and 11-

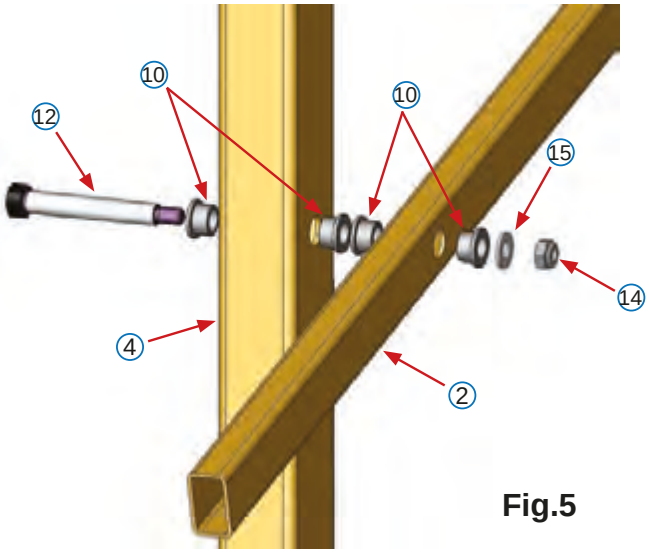

Fig.5

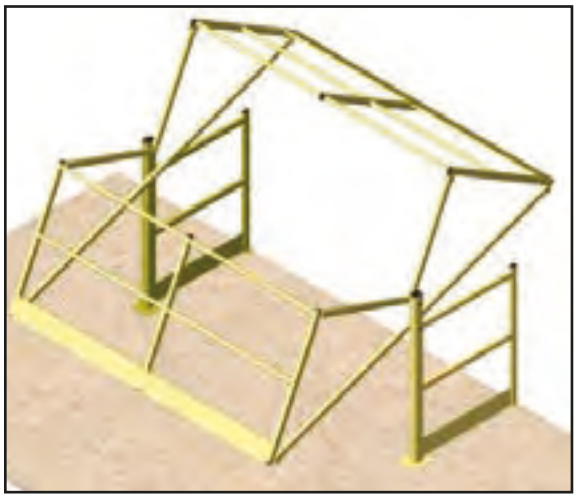

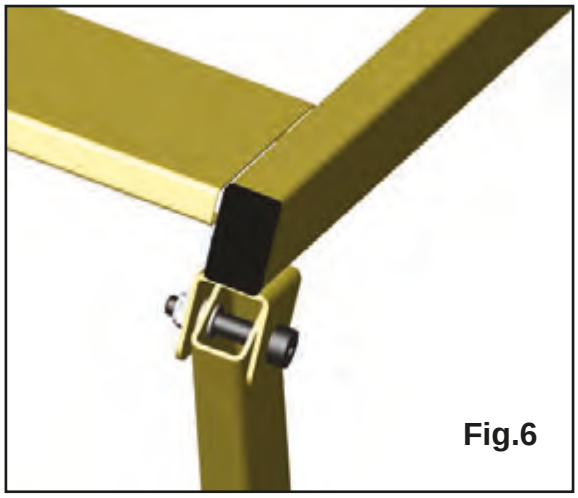

Fig.6

The brake nuts -Nb 14- have to be lightely tightened but not blocked.

- Assemble the second panel -Nb 1- on the beam extremity -Nb 2- and then the arms -Nb 3- respecting the order and the direction of the elements (see fig. 3).

Connection with the handrail

Step 13.3

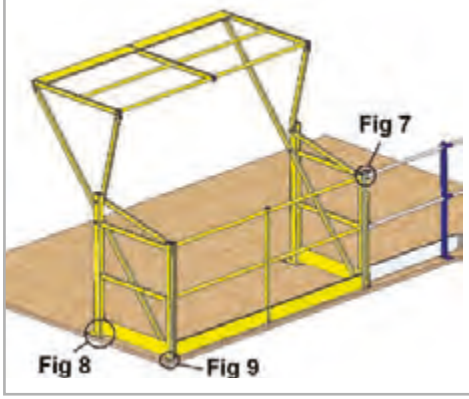

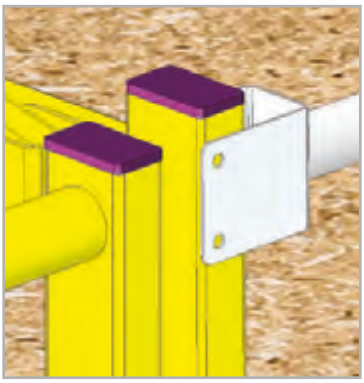

- Align the safety gate to the handrail, as close as possible to border the mezzanine, respecting the capacit limit of the floor. Fix the handrail tubes to the safety gate foot using connecting elements -Nb 17-

Fig.7

Fixing to the floor

Step 13.4

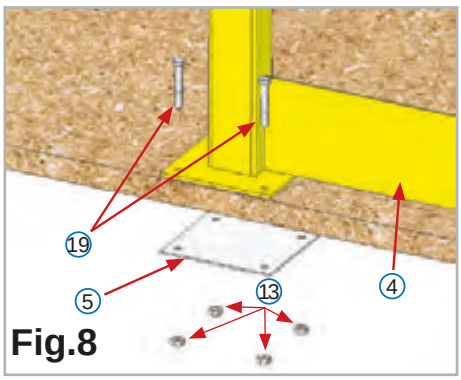

Fig.8

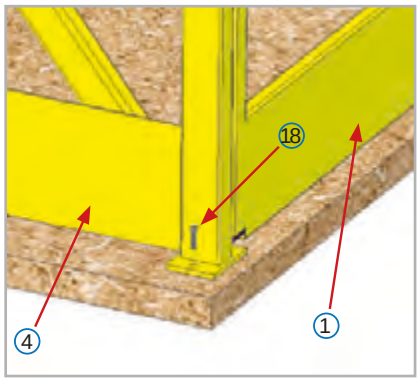

- Fix the whole elements to the floor using screws H M 10 x 70 -Nb 19- and self drilling screws diam. 5 x 40 -Nb 18- The main wedges of the ground - Nb 4- will have to be reinforced under the floor (one simple layer of 38 mm or a double layer of 22 mm) with a counter wedge of 3 mm -Nb 5- Place the safety gate side protection -Nb 20- on the ground -Nb 4-. Fix it with 4 self drilling screws -Nb 21- on the ground -Nb 4-

Fig.9

Assembling of safety gate side protection (accessory sold apart)

Step 13.5

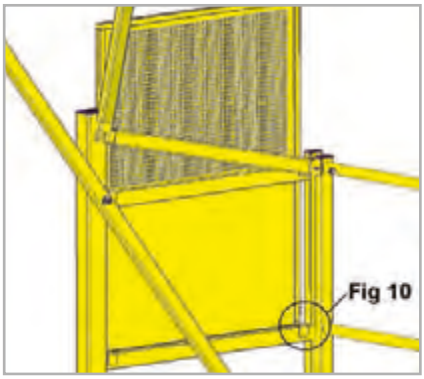

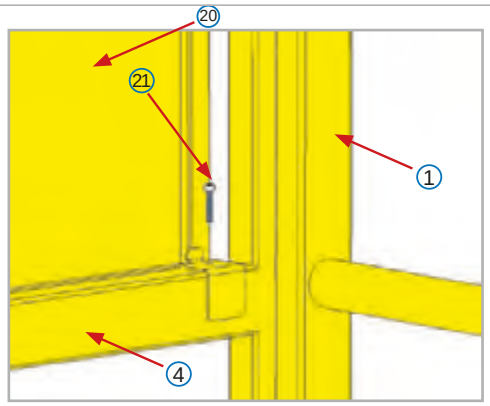

- Position the side protection of the safety gate rep.20 on the ground rep 4. Fix it with the 4 self drilling screws rep 21 on the ground rep 4.

3. Maintenance and guarantee

Maintenance

The steel structure of the safety gate can be cleaned with chlorine-free detergent. Use no the detergeant damaging the epoxy paint. The users have to check yearly the tightening of bolts of the structure of the safety gate and its accessories.

Modifications of the structure

Any changes of the structure or/and its accessories in relation to the drawing made initially and even the change of one component of this structure or/and its accessories must be approved before by the manufacturer. Moreover, in case of impact, if the structure or one accessory shows cracks or bendings, the use of the safety gate must be stopped.

The owner and/or the user had to ask to the manufacturer for checking the consequences of the impact on the mechanical resistance of the structure and its accessories.

USE

Notes

Note

Note